TECHNOLOGY EDUCATION
CONSTRUCTION SYSTEMS

GRADES 9-12
SYSTEMS COURSE

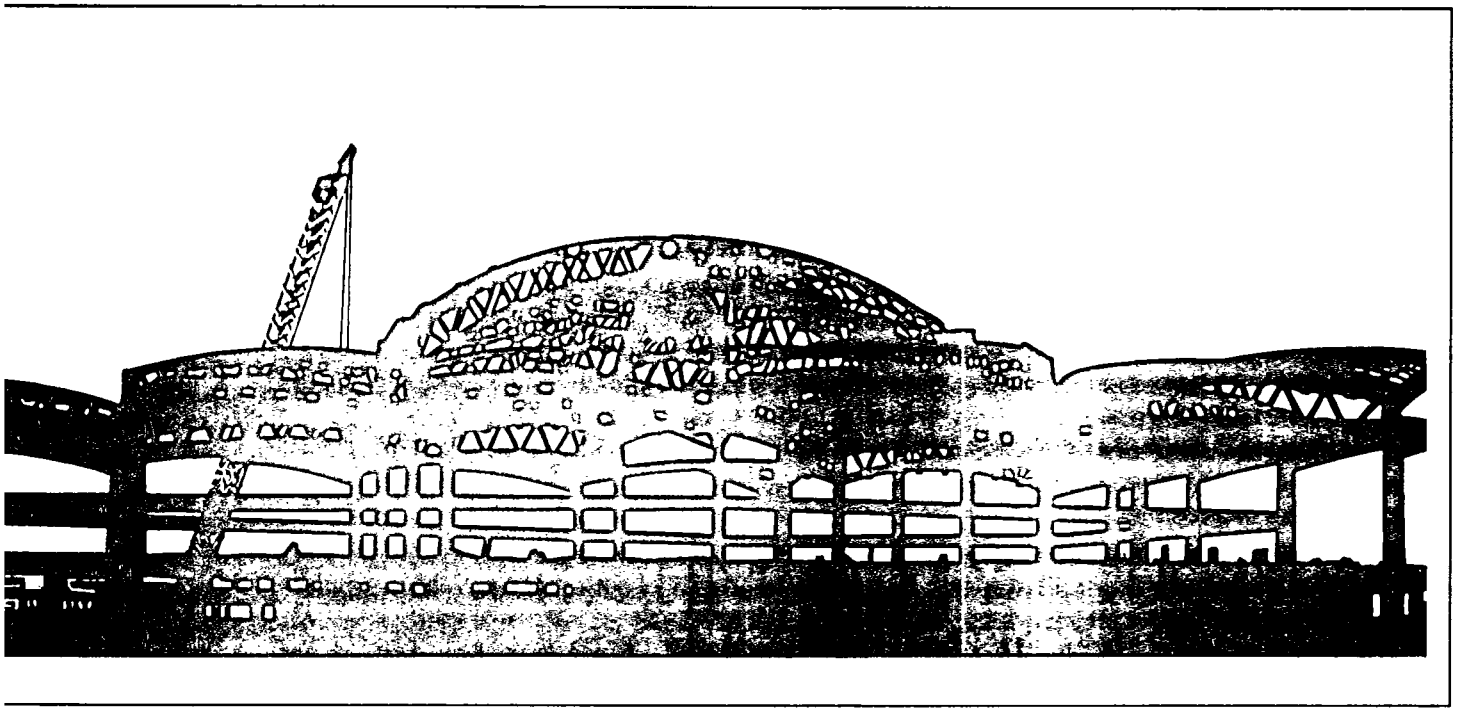

The University of the State of New York
The State Education Department
Bureau of Home Economics
and Technology Education Programs
Division of Occupational Education
Albany, New York 12234

THE UNIVERSITY OF THE STATE OF NEW YORK

Regents of The University

MARTIN C. BARELL, *Chancellor*, B.A., I.A., LL.B	Muttontown
R. CARLOS CARBALLADA, *Vice Chancellor*, B.S.	Rochester
WILLARD A. GENRICH, LL.B.	Buffalo
EMLYN I. GRIFFITH, A.B., J.D.	Rome
JORGE L. BATISTA, B.A., J.D.	Bronx
LAURA BRADLEY CHODOS, B.A., M.A.	Vischer Ferry
LOUISE P. MATTEONI, B.A., M.A., Ph.D.	Bayside
J. EDWARD MEYER, B.A., LL.B.	Chappaqua
FLOYD S. LINTON, A.B., M.A., M.P.A.	Miller Place
MIMI LEVIN LIEBER, B.A., M.A.	Manhattan
SHIRLEY C. BROWN, B.A., M.A., Ph.D.	Albany
NORMA GLUCK, B.A., M.S.W.	Manhattan
ADELAIDE L. SANFORD, B.A., M.A., P.D.	Hollis
WALTER COOPER, B.A., Ph.D.	Rochester
CARL T. HAYDEN, A.B., J.D.	Elmira
DIANE O'NEILL MC GIVERN, B.S.N., M.A., Ph.D.	Staten Island

President of The University and Commissioner of Education
THOMAS SOBOL

Executive Deputy Commissioner of Education
THOMAS E. SHELDON

Deputy Commissioner for Elementary, Middle, and Secondary Education
ARTHUR L. WALTON

Assistant Commissioner for General and Occupational Education
LORRAINE R. MERRICK

Acting Director, Division of Occupational Education
LEE A. TRAVER

Chief, Bureau of Home Economics and Technology Education Programs
JEAN C. STEVENS

The State Education Department does not discriminate on the basis of age, color, religion, creed, disability, marital status, veteran status, national origin, race, gender or sexual orientation in the educational programs and activities which it operates. Portions of this publication can be made available in a variety of formats, including braille, large print or audiotape, upon request. Inquiries concerning this policy of equal opportunity and affirmative action should be referred to the Department's Affirmative Action Officer, NYS Education Building, 89 Washington Avenue, Albany, NY 12234.

COURSE: CONSTRUCTION SYSTEMS

COURSE OVERVIEW

One of the key activities of society is that of production. Production can be defined as the processing of materials and knowledge to make products. Production can be divided into two major categories -- manufacturing and construction. If an object is produced in a factory, the procedure is considered to be manufacturing. If it is produced or assembled on site, it is considered to be construction. Each has its unique concepts and techniques in our technological society.

Most of the residential buildings, commercial buildings, roadways, dams and bridges used by man are a result of construction activity. Construction is organized around the universal systems with inputs, resources, processes, outputs and control as major categories. In this instance, these five categories have been specifically tailored to construction activities.

Currently, new developments in solar heating, manufactured construction, lasers, and computer-aided design systems are being utilized in construction systems. These developments and automated production systems are related to careers, worker qualifications, and employment possibilities. New products and the utilization of resources have economic, societal, and environmental impacts. These are all important considerations in the Construction Systems course.

INSTRUCTIONAL METHODOLOGY

This course will require a laboratory equipped with tools and machines essential to student construction project activity. Emphasis should be given to hands-on learning. Approximately 75% of the class time should be devoted to this type of activity. The remaining 25% will be devoted to theory and instruction.

Time is a limiting factor and requires that the instructor carefully structure the course. The content outline provides a complete overview of the topics to be covered. Varying amounts of time can be spent on certain areas depending upon the teacher's plan for implementing of the curriculum. It is expected, however, that each area of the content outline be covered in some way to offer a complete view of the industry.

Safety and career information are extremely important and should be stressed throughout each topic.

COURSE: CONSTRUCTION SYSTEMS

Construction Systems is organized around the universal systems model with inputs, resources, processes, outputs, and control as major categories. These five categories have then been specifically tailored to construction concepts and correlate very closely to the universal systems model.

USE IN SEQUENCE: Systems course

This course is one of the New York State approved Systems courses in Technology Education. It is one of five courses designed to give students a firm but broad exploration of the technical world in which they live. Students completing a sequence in Technology Education must have successfully completed any one of these five Systems courses.

This course may also be taken by any student as an elective. If the instructor uses this syllabus as a guide for instruction, students may be granted Regents credit for the experience.

Several courses within Technology Education offerings can be offered on a 1/2-unit or 1-unit basis. Course work earning 1/2-unit must comprise a minimum of 54 hours of instruction and course work earning 1-unit must comprise a minimum of 108 hours of instructional time.

Students with Disabilities

The Board of Regents, through the part 100 Regulations of the Commissioner, the Action Plan, and The Compact for Learning, has made a strong commitment to integrating the education of students with disabilities into the total school program. According to Section 100.2(s) of the Regulations of the Commissioner of Education, "Each student with a handicapping condition as such term is defined in Section 200.1(ii) of this Chapter, shall have access to the full range of programs and services set forth in this Part to the extent that such programs and services are appropriate to such student's special educational needs." Districts must have policies and procedures in place to make sure that students with disabilities have equal opportunities to access diploma credits, courses, and requirements.

COURSE: CONSTRUCTION SYSTEMS

The majority of students with disabilities have the intellectual potential to master the curricula content requirements for a high school diploma. Most students who require special education attend regular education classes in conjunction with specialized instruction and/or related services. These students must attain the same academic standards as their nondisabled peers to meet graduation requirements, and, therefore, must receive instruction in the same content areas, at all grade levels. This will ensure that they have the same informational base necessary to pass statewide testing programs and meet diploma requirements.

Teachers certified in the subject area should become aware of the needs of students with disabilities who are participating in their classes. Instructional techniques and materials must be modified to the extent appropriate to provide students with disabilities the opportunity to meet diploma requirements. Information or assistance is available through special education teachers, administrators, the Committee on Special Education (CSE) or student's Individualized Education Program (IEP).

Strategies for Modifying Instructional Techniques and Materials

1. Students with disabilities may use alternative testing techniques. The needed testing modification must be identified in the student's Individualized Education Program (IEP). Both special and regular education teachers need to work in close cooperation so that the testing modifications can be used consistently throughout the student's program.

2. Identify, define and pre-teach key vocabulary. Many terms in this syllabus are specific and some students with disabilities will need continuous reinforcement to learn them. It would be helpful to provide a list of these key words to the special education teacher in order to provide additional reinforcement in the special educational setting.

3. Assign a partner for the duration of a unit to a student as an additional resource to facilitate clarification of daily assignments, timelines for assignments, and access to daily class notes.

4. When assigning long-term projects or reports, provide a timeline with benchmarks as indicators for completion of major sections. Students who have difficulty with organizational skills and time sequence may need to see completion of sections to maintain the organization of a lengthy project or report.

COURSE: CONSTRUCTION SYSTEMS

Infusing Awareness of Persons with Disabilities Through Curriculum

In keeping with the concept of integration, the following subgoal of the Action plan was established.

In all subject areas, revisions in the syllabi will include materials and activities related to generic subgoals such as problem solving, reasoning skills, speaking, capacity to search for information, the use of libraries and increasing student awareness of and information about the disabled.

The purpose of this subgoal is to ensure that appropriate activities and materials are available to increase student awareness of disabilities.

This curriculum, by design, includes information, activities, and materials regarding persons with disabilities. Teachers are encouraged to include other examples as may be appropriate to their classroom or the situation at hand.

STUDENT LEADERSHIP SKILLS

Development of leadership skills is an integral Part of occupational education in New York State. The New York State Education Department states that, "Each education agency should provide to every student the opportunity to participate in student leadership development activities. All occupational education students should be provided the opportunity to participate in the educational activities of the student organization(s) which most directly relate(s) to their chosen educational program."

Leadership skills should be incorporated in the New York State occupational education curricula to assist students to become better citizens with positive qualities and attitudes. Each individual should develop skills in communications, decision making/problem solving, human relations, management, and motivational techniques.

Leadership skills may be incorporated into the curricula as competencies (Performance Objectives) to be developed by every student or included within the Suggested Instructional Strategies. Teachers providing instruction through occupational educational curricula should familiarize themselves with the competencies. Assistance may be requested from the State advisor of the occupational student organization related to the program area.

COURSE: CONSTRUCTION SYSTEMS

Students who elect to become active members of one of the student leadership organizations chartered by the New York State Education Department have the advantage of the practical forum to practice leadership skills in an action oriented format and have the potential for recognition of their achievements at the local, State, and national level.

SKILLS, KNOWLEDGE, AND BEHAVIORS TO BE DEVELOPED

The student will be able to:

1. Identify the universal systems model as it relates to construction technology.

2. Assess the importance of construction technology to society in the manner that it provides shelter, roadways, dams, and other constructed projects for humans.

3. Delineate the necessary inputs and resources for the process of construction technology.

4. Analyze and demonstrate various processes of construction technology.

5. Evaluate projects and control of construction as to their quality and their effect on society and the environment.

6. Utilize mathematical and scientific principles in the solving of practical construction problems within the laboratory setting.

7. Demonstrate problem solving and analytical thinking skills in solutions to simple engineering problems within the context of laboratory activities.

8. Develop hand and machine tool skills.

9. Demonstrate the knowledge of the safe use of machines, tools and materials.

COURSE: CONSTRUCTION SYSTEMS

CONTENT OUTLINE

I. System Command Input
   - A. Desired project
     1. Project selection
     2. Project specifications
     3. Pre-construction planning
   - B. Expected impacts (environmental, economic, societal, personal)

II. Resources
   - A. People
     1. Job classification/career preparation
     2. Organizational structure
     3. Recruitment
   - B. Information
     1. History
        - a. Residential
        - b. Non-residential
     2. Safety
     3. Technical knowledge
        - a. Research and development
        - b. Planning
        - c. Engineering
   - C. Materials
     1. Raw material sources
     2. Conversion from raw materials to construction materials
     3. Procurement
     4. Comparative characteristics
   - D. Tools/machines
     1. Function/selection
     2. Operating techniques
     3. Maintenance

E. Capital
   1. Sources
   2. Disbursement

F. Energy
   1. Types
   2. Applications

G. Time
   1. Quantity
   2. Management

III. Processes

A. Foundation Systems
   1. Materials
   2. Types

B. Superstructures
   1. Materials
   2. Types

C. Enclosure Systems
   1. Materials
   2. Flooring, walls, ceiling, roofing
   3. Insulating

D. Utility Systems
   1. Types
   2. Materials

IV. Outputs

A. Completed Project
   1. Site completion
   2. Maintenance

B. Impacts
   1. Environmental
   2. Economic
   3. Societal
   4. Personal

COURSE: CONSTRUCTION SYSTEMS

V. Control
   A. Reasons
      1. Quality assurance
      2. Profitability

   B. Methods
      1. Monitor outputs
      2. Compare outputs with inputs
      3. Adjust processes

GENERAL INSTRUCTIONAL STRATEGIES

Sample instructional strategies are described in the section that follows, but they may appear somewhat fragmented without a description of the overall strategy for the module. This section on General Instructional Strategies, therefore, is included to explain the nature of the module in a more cohesive form.

The overall strategy is to involve students with hands-on activity of an actual construction project. With the time restraints that are given, a small-scale project, something like a storage shed or a wall section, pre cast concrete forms, truss frame construction, models of community development to include roads, dams, along with residential and non-residential construction, would probably be the most appropriate (see Appendix). There are other general strategies that the instructor might want to employ, however.

1. **Models.** Building models can provide useful activity for many of the stated objectives, but the instructor must realize that the focus of the course should be more toward actual construction.

2. **Community projects.** The instructor is encouraged to solicit the community for small building projects that can be handled by the size and expertise of the class and that permit the performance objectives of the module to be met.

3. **Instructional sequence.** The display of the course outline in this document might suggest a sequential teaching strategy. Although this may be true to some extent, it is not absolutely necessary. The instructor may decide, for instance, to offer instruction on quality control early in the semester, even though it is listed at the end of the content outline. The sequence of topics can be changed to facilitate the individual teaching plans of the instructor and the laboratory equipment, although all performance objectives must be accomplished to complete the syllabus satisfactorily.

4. **Time management.** The instructor should manage the allotted time for the course with flexibility in order to make up for problems that occur during the construction activity. Nothing is more frustrating for students than not to finish the construction of an activity they have taken so long to design and organize. The five topics identified in the content outline; command input, resources, processes, outputs, and control, are not equal in terms of the amount of time to be devoted to each topic.

COURSE: CONSTRUCTION SYSTEMS

A suggested division of time might be:

TOPIC	INSTRUCTIONAL TIME
System Command Inputs	5% (approximately **2 hours**)
Resources for Construction	30% (approximately **16 hours**)
Processes of Construction	50% (approximately **28 hours**)
Outputs of Construction	5% (approximately **2 hours**)
Control of Construction	10% (approximately **6 hours**)
	Total: 100% (approximately 54 hours)

Time is based on three hours per week multiplied by 18 weeks of instructions.

5. **Tool skill.** Tool skill is a very important part of the success of the activity associated with this module. The instructor should identify the tools required to fulfill the activity and spend a sufficient amount of time to assure that the students have the necessary technical and safety skill on those selected tools. If this means a week or more of instruction on the tools, the instructor should reschedule time in the remainder of the course to comply with other performance objectives. Due to the nature of using large sheets of material and long pieces of framing stock, it is suggested to spend time explaining the use of the portable circular saw.

6. **Storage.** Space for storage of construction materials and projects can be a problem in many laboratories that were not designed with this type of activity in mind. The instructor should plan for activities that can take advantage of good weather, or activities that can be scaled down in size to adjust to the space available in the laboratory.

7. **Field trips.** A field trip to a building project or local municipal planning department can be an invaluable strategy for accomplishing many of the objectives in rapid succession. The instructor should find a project, such as a housing development, that is in varying stages of completion. This will provide that opportunity for the students to see several of the construction steps as they are actually occurring. Also, a "field trip" around the mechanical rooms of the school is an excellent way to communicate concepts relating to commercial structures.

8. **Slides.** Color, 35mm slides provide an easy and valuable way for the instructor to bring construction projects to the laboratory. They are particularly useful if field trips are not possible, but they may also be used along with the field trip strategy. An instructor may visit a project site with a camera and take two or three rolls or film to capture quickly the several stages of the project. Also, large-scale projects, such as roads, dams, factories, and the like, might best be captured on film.

9. **Computer graphics.** The use of computer programs for the design and engineering of construction plans is a popular technique used today. Instructors may demonstrate this technology if the equipment is available.

10. **Written responses.** Several of the curriculum objectives can be covered by written reports. The instructor is encouraged to offer these assignments as homework. This will allow the maximum amount of available laboratory time for the actual hands-on construction project.

11. **A construction company.** Many instructors may want to organize an actual construction company with their class. This is an excellent strategy to get students involved with design, purchasing, scheduling, and many other objectives of the course.

12. **Appropriate activity.** The instructor should take care to involve students with the appropriate degree of difficulty when choosing an activity. An entire class may not be involved on the same activity. An example would be a storage shed. The remaining part of the class may be involved with some other activity such as precast concrete forms or another construction activity (see Appendix).

13. **Sample instructional strategies.** Many more instructional strategies are listed after the performance objectives than can be accomplished by the instructor. They are offered as "idea stimulators" for the teacher, and should be considered as such. They have also been arranged so that strategy "A" corresponds with supporting performance objective "A". This matching of strategies with supporting competencies is offered as a convenience to teachers.

14. **Hands on activity.** The success of the course and the level of student motivation is effected by the amount of hands on activity. A goal of 25% instructional time and 75% hands on activity therefore should be implemented.

COURSE: CONSTRUCTION SYSTEMS

PERFORMANCE OBJECTIVES/SUPPORTING COMPETENCIES*

I. System Command Inputs
Suggested Instructional Time: 2 hours

A. The student will identify a project for the construction activity.

In order to do this, the student must be able to:

1. Evaluate the project selection for the chosen activity.
2. Produce a list of required specifications for the chosen activity.
3. Plan the pre-construction variables relating to the activity.

B. The students will predict possible impacts of their construction activity, given construction variables by the instructor.

In order to do this, the student must be able to:

1. Explain the possible effect of environmental, economic, societal, and personal impacts as they apply to the student's selected construction activity.

* NOTE: Each performance objective is written without specific reference to criteria for evaluation. The minimum performance level is left to the discretion of the instructor, due to the diversity of the student population to be served (low achievers, average, high achievers, special) and the range in grade level for this offering.

COURSE: CONSTRUCTION SYSTEMS

SUGGESTED INSTRUCTIONAL STRATEGIES

I. A. 1. a. With the help of the instructor, the students will choose a construction project or projects based on the limitations present.

b. The instructor will develop a statement of needs for a project that is to be built by the class.

2. a. The students will individually, and then as a group complete a list of specifications for the chosen construction project.

b. Students will develop a bill of materials for their project.

3. a. With the instructor as a resource, the students will plan all the construction variables that must be considered.

b. The instructor could display a complete set of plans used in residential, commercial, industrial, and transportation structures. Plans should include a complete set of specifications.

c. The instructor will obtain an application for a building permit and a building permit form. Students will fill them out in accordance to their selected activity.

I. B. a. The students could brainstorm a list of possible impacts a construction project might have regarding environmental, economic, societal, and personal concerns.

b. The instructor will site examples of specific construction projects that had serious problems by not forecasting impacts.

COURSE: CONSTRUCTION SYSTEMS

PERFORMANCE OBJECTIVES/SUPPORTING COMPETENCIES

II. Resources for Construction
Suggested Instructional Time: 16 hours

A. The student will analyze the preparation and utilization of people as a resource in construction projects.

In order to do this, the student must be able to:

1. Analyze the major job classifications of workers in the construction industry and the training required.
2. Describe the structure used in organizing personnel of a construction company.
3. List the methods employed by the construction industry to recruit and train people.

B. The student will utilize the resource of technical and historical information in the safe construction of their project.

In order to do this, the student must be able to:

1. Identify major historical developments in residential and non-residential construction.
2. Perform in a safety program to set safety standards on a daily basis, 100% of the time.
3. Identify and utilize R & D, planning and engineering techniques in the construction of his/her project.

C. The student will demonstrate the ability to use appropriate materials in his/her construction project.

In order to do this, the student must be able to:

1. Identify the source of common raw materials.
2. Explain the processes of converting raw materials to construction materials.
3. Explain the methods of procuring construction materials supplies for a project.
4. Explain the comparative characteristics of construction materials.

D. The student will demonstrate basic operating principles of construction-related tools and machines.

In order to do this, the student must be able to:

1. Select the proper tool or machine to perform a given function.
2. Demonstrate the safe and proper operation of the tools and machines in the laboratory situation.
3. Exercise the proper care and maintenance of tools and equipment.

E. The students will relate the need for capital and finance to the development of construction projects.

In order to do this, the student must be able to:

1. Identify several sources of capital.
2. Discuss how finances are disbursed.

F. The students will identify the various types of energy commonly used by the construction industry and the best type for a specific task.

In order to do this, the student must be able to:

1. List the common forms of energy used by the construction company.
2. Apply given energy sources to tasks to be performed.

G. The students will substantiate that time is a necessary resource to the construction process and that its quantity must be apportioned and managed to achieve an efficient and profitable construction project.

In order to do this, the student must be able to:

1. Analyze the quantity of time available for a construction project.
2. Manage available time so that the construction activity will be successful and profitable.

COURSE: CONSTRUCTION SYSTEMS

SUGGESTED INSTRUCTIONAL STRATEGIES

II. A. 1. a. After the instructor has made a list of job classifications in the construction industry, have students describe the training required for each classification.

b. The teacher will provide a list of construction job classifications. Each student will consult the ***Occupational Outlook Handbook*** and list the educational requirements of each job classification, describe the need for such personnel, and identify the function and duties of each job classification. (Obtain Handbook from Guidance Department).

2. a. Students will be asked to place a list of job titles in a line-staff organizational chart of a company, real or fictitious.

b. Through the use of an organizational chart, the teacher will illustrate how a construction company is structured into various departments, lines of control, and how each department influences the other.

c. The teacher will organize the class into a construction company for the purpose of initiating a small construction project. Student names and job titles should be placed on an organizational chart to illustrate the structure of the student construction company.

3. a. Students will simulate the formation of a construction company. They should then apply and be interviewed for positions.

b. Students will design and complete applications for various jobs.

II. B. 1. a. Students will describe some of the many material-joining techniques (peg, mortise and tenon, lime mortar, welding, etc.) that were used during various construction eras.

b. The instructor will develop a list of construction techniques and have students identify the approximate time period when each technique was used.

c. Using a time line and diagrams of structures,the instructor should illustrate how construction projects have been developed to meet the needs of society. This time line should cover the period of prehistoric man to today's construction projects.

2. a. Students are given a list of commonly occurring safety infractions. A discussion should ensue on the possible effects of these actions.

   b. The instructor will develop a safety quiz that students must retake until they are able to master the questions with 100 percent accuracy.

   c. Students will demonstrate their ability to operate power equipment safely, by taking a performance test.

   d. The instructor will arrange a trouble shooting exercise where students identify simulated hazards that were set by the instructor.

   e. Given a laboratory setting in which students will work on a construction project, the instructor will demonstrate the proper and safe use of the various tools that students will be using.

   f. The instructor sets an example on a daily basis of how to work safely in a laboratory setting 100 percent of the time.

3. a. Students will be asked to draw a rough sketch (floor plan) of a "dream house" that has three bedrooms, kitchen, bath, living, dining, and utility rooms. Students should gain an appreciation of the difficulties encountered in design ideation.

   b. Students should design a construction project that will involve the entire class and be reasonable in cost (see Appendix A).

   c. The instructor should present the parameters of a class project and have students develop their own feasibility study. They could then report results to the class. An outline of the components of a feasibility study will help to provide student direction.

   d. Students will layout a model truss board for a truss building (see Appendix B).

II. C. 1. a. Students will make a list of common raw materials and where they are found, either locally or at a great distance.

b. With the aid of the instructor, have students brainstorm possible sources of raw materials for construction projects. Rationale for their choices should be given.

2. a. A group of students will process a log from its raw state to a dressed board.

b. The instructor will demonstrate the dimensional stability of wood with a change of moisture content.

3. a. Students will elect from members of the class a purchasing department for a construction company that they will establish. Those elected will obtain quotes on necessary materials and supplies for a residential home project, utilizing comparison shopping.

4. a. Students will test the strength of various materials having the same span and cross section.

b. The instructor will simulate testing procedures, such as tensile, compression, and slump using hydraulic jacks or other simple load techniques.

c. The instructor will use ***Architectural Graphic Standards*** or other references on strength of materials, to compare size and type to span and load.

d. The instructor will make a collection of the various types of metal fasteners used in construction to include the different types of metal and coatings used.

II. D. 1. a. The instructor will initiate a laboratory activity where students must use each of several basic hand tools used in the construction industry. An individual or small project such as a shed, dog house, saw horses, and the like would be ideal for this strategy.

b. The instructor will ask to borrow some of the smaller specialty tools from a local builder to show the class on a specific day.

c. Using construction catalogues, the instructor should show the class specialty tools used in construction and explain their purposes. Examples are the use of a surveyor's transit or laser level.

2. a. The instructor will demonstrate the proper use of hand tools and equipment. Students may then participate in a construction activity where this learning about hand tools and equipment can be applied.

   b. The instructor will demonstrate the use of new and automated pieces of power equipment. To secure a pneumatic staple gun or nailer, portable screw guns and surveying equipment, the instructor must plan and budget well in advance.

3. a. The instructor will have students employ a maintenance program during the last few class meetings, where the tools and equipment in the laboratory are cleaned and maintained. The maintenance program should be formalized and similar to those found in the construction industry. It should not involve mere janitorial cleaning work.

   b. Students will make a schedule of maintenance operations for tools that they have at home.

   c. Students will participate in maintaining the tools in the lab on a daily basis.

II. E. 1. a. Students will choose a local public project and identify the sources of funds that were used to complete the project. Some of the sources listed should include:

1. savings	4. other loans
2. mortgage	5. bond issues
3. investors	6. taxes

   b. The instructor will demonstrate the process of securing a loan from the school, parents, or a bank.

2. a. Students will set up their own construction company for community projects. They should be paid a small salary (possibly $0.10/hour) as well as for materials. Students should then be organized to make sure that materials are properly purchased and that enough money is left to pay the (minimal) wages and make a profit. The profit might go into the laboratory fund for tools, equipment, etc.

   b. The instructor will appoint a student to become treasurer in charge of disbursing project funds.

c. The instructor will invite a guest speaker from industry to speak to the students on the topic of receiving and disbursement of funds.

II. F. 1. a. The class will develop a list of various types of energy used at a construction site.

2. a. The class will analyze the different energy sources used to perform a given task, for example: heating a house with electricity, wood, gas, oil, or coal.

b. The instructor will discuss active and passive solar heating systems.

G. 1. a. Students will evaluate their construction project to determine ways in which time might have been more efficiently spent.

b. The class will discuss prefabricated vs. stick construction, such as: Prebuilt roof trusses vs. cut on site rafters. Prehung doors vs. cutting parts and assembling on site. Prebuilt fireplaces vs. masonry fireplaces

c. The student construction company should organize the work and the workers to complete the project in an efficient and profitable manner.

2. a. As part of the pre-production planning, students will establish goals and objectives as related to time for their construction activity.

b. Students will list the possible causes of loss of time on a construction project, such as labor problems, inclement weather, unforeseen construction problems.

COURSE: CONSTRUCTION SYSTEMS

PERFORMANCE OBJECTIVES/SUPPORTING COMPETENCIES

III. Process of Construction
Suggested Instructional Time: 28 hours

A. The student will differentiate between and describe the various types of foundation systems that are presently utilized in residential and non-residential construction.

In order to do this, the student must be able to:

1. List the advantages and limitations of at least two different materials used to construct foundation systems.
2. Explain or construct at least two different types of foundation systems.

B. The student will evaluate and compare the various types of super-structures that are presently used by the residential, non-residential and heavy construction industries.

In order to do this, the student must be able to:

1. Describe and compare the various materials which are used to construct superstructure systems.
2. Describe and compare the various types of super-structure systems.

C. The student will classify the function and importance of the various enclosure systems that are integral components of a superstructure system.

In order to do this, the student must be able to:

1. Describe and compare the various materials that are used to enclose superstructures.
2. Demonstrate how materials are utilized in the fabrication of flooring, wall, ceiling, and roofing enclosure systems.
3. Analyze the functions and application of insulation in enclosure systems.

D. The student will describe the various utility systems that are installed in a construction project.

In order to do this, the student must be able to:

1. Analyze the function and application of the various types of utility systems, such as electrical, plumbing, heating/cooling, and communications.
2. Describe and compare the various materials used in utility systems.

SUGGESTED INSTRUCTIONAL STRATEGIES

III. A. 1. a. Students will perform a concrete slump test according to ASTM procedures.

b. Students will mix and pour concrete into a mold for piers, benches or other activity (see Appendix C).

2. a. Students will build two models of a residential building, one employing an all-weather wood foundation and the other a foundation of poured concrete. Differences between the two techniques should become evident as the students progress.

b. The instructor will show color slides of a construction site employing different foundation types.

c. Students will write a report on block bonding materials other than mortar.

d. One team of students will set forms and pour a small concrete section of foundation wall while another team builds a small section of a cement block foundation wall.

e. Students will build wooden forms for a precast concrete bench (see Appendix C).

f. Students will stake out a building using batter boards.

g. Students will use a post hole digger to prepare for the pouring of a pier for a bench foundation (see Appendix C).

COURSE: CONSTRUCTION SYSTEMS

III. B. 1. a. Students will identify where specific super-structure materials (wood, metal, concrete) might be used best in construction projects. A study of your school building can be an ideal source.

b. Students will select the proper floor joists from a floor joist chart for a particular application.

c. Using a heat source and surface thermometer, students will compare the conduction qualities of wood, metal, and concrete.

d. Students will compare the advantages and limitations of wood, metal, and concrete as construction materials, through the use of a chart, table, or graph.

2. a. Students should identify structures in their community or other area as to type of superstructure system used.

b. Students will build model trusses of various shapes using a truss board (see Appendices A and B).

c. Students will build model bridges and test for strength.

d. Using blue prints of a house, the instructor will indicate the various framing features of the building.

III. C. 1. a. Through the use of a scale model house, storage shed or model truss building, students should enclose the superstructure with various materials.

b. The student will construct models of non-residential structures using materials other than wood.

2. a. Students will calculate the number of squares of shingles needed to shingle a certain size roof.

b. Students should enclose a framed wall section with sheathing, vapor barrier, siding, shingles, and wallboard.

c. Students will apply roof shingles to the storage shed.

3. a. Students will determine the most appropriate R-value for a selected residential building project, and will explain how the insulation should be installed (type and application technique).

b. Students will report on ways they might add insulation to their homes to make them more efficient.

c. Students will place different types of insulation material in various sections of a framed wall section.

d. The students will select the best material installation by calculating the BTU loss of the building at various temperatures.

III. D. 1. a. The instructor will explain the wiring systems that are included in a conventional new home to include 120V, 240V, and the use of separate low voltage wiring.

b. The instructor will arrange to tour the school itself to analyze utilities.

c. Students will follow a plumbing, electrical and heating layout plan.

d. The instructor will explain the operation of a septic tank system and conduct a percolation test.

e. Students will build and demonstrate a solar water heater.

2. a. Students will wire several wall switches, receptacles, and lights.

b. Students will install wiring in a storage shed.

c. Students will assemble various types of pipe and explain where each is used.

d. Students will perform an accurate energy audit of their home to determine possible areas of energy savings. (See computer software reference.)

COURSE: CONSTRUCTION SYSTEMS

PERFORMANCE OBJECTIVES/SUPPORTING COMPETENCIES

IV. Outputs of Construction
Suggested Instructional Time: 2 hours

A. The student will describe site completion and maintenance activities that must be accomplished on a construction project.

In order to do this, the student must be able to:

1. List the final tasks for site completion.
2. Explain the significance of preventative maintenance.

B. The student will interpret the environmental, economic, societal, and personal impacts connected with construction projects.

In order to do this, the student must be able to:

1. Explain the possible effects that a construction project may have upon the environment.
2. Determine the economic impacts that a construction project may have on the economy.
3. Describe some of the societal impacts that would occur due to a construction project.
4. Analyze the effects that a construction project may have upon an individual and/or community.

SUGGESTED INSTRUCTIONAL STRATEGIES

IV. A. 1.a. Students will write a report on what could be done to improve the landscaping of a particular home, school, or public building.

b. When the student construction project is completed, students will remove all debris, return tools to their proper locations, and do general clean-up of all areas of work in the laboratory.

2.a. Students will go through their own home and make a list of all the things that are broken or that need maintenance attention.

b. The instructor may take pictures of a rundown house. (It would be wise to go to a distant community to take these pictures.) The students will identify the effects of poor maintenance over the course of time.

c. Students will write a maintenance plan for the next twenty years that would prevent deterioration of their homes.

d. Students will write suggestions to reduce home maintenance costs.

e. Students will keep a log of home repairs made by their parents or outside repairmen, the cost, and why the repairs were needed.

f. The instructor will brainstorm a preventative maintenance program for a storage shed.

IV. B. 1. a. Students will pick a major construction project occurring in their specific area (like a high-rise, power plant, etc.) and write a short essay on the possible environmental effects.

b. Students will identify where the waste materials are dumped in their community.

c. The instructor will identify environmental impacts on a diagram, such as a future wheel, which shows the reactive effects of a construction project.

d. Students should prepare an environmental impact statement for the location of their home. It should consider the effects on groundwater and atmospheric pollution, traffic patterns, and wildlife.

IV. B. 2. a. Students will find a friend, relative, or acquaintance who has just bought his/her first home. The student will interview that person, with specific questions given by the instructor and have the answers submitted as homework.

b. Students will examine literature available from banks, chambers of commerce, etc. and inquire about financing and the economic impact that a major construction project might have on the local, state or national economy.

c. Students should become familiar with the effect of a mortgage loan, owner equity, local tax rates, tax deductions, and insurance costs on the personal finances of an individual.

3. a. Students will review magazines and find articles that relate to the improvement of society because of the construction process. Articles such as urban renewal, restoring historic structures, could be identified.

b. Students will brainstorm what the home of the future might be like.

4. a. Students will identify a large, local construction project and discuss the effects that it will have on the lives of those who reside in the community.

b. The mayor of the town may be consulted to explain the possible effects that a construction project may have upon the individual and/or community.

PERFORMANCE OBJECTIVES/SUPPORTING COMPETENCIES

V. Control of Construction
Suggested Instructional Time: 6 hours

A. The student will identify the reasons for continually controlling the resources used in construction.

In order to do this, the student must be able to:

1. Utilize quality control throughout the building of a construction project.
2. Increase the profitability of a construction project.

B. The student will outline how resources are controlled in a construction system.

In order to do this, the student must be able to:

1. Develop monitoring techniques for use during the construction project.
2. Use comparison techniques to check recent construction work against existing plans.
3. Adjust the construction process to compensate for problems that are causing inferior quality.

COURSE: CONSTRUCTION SYSTEMS

SUGGESTED INSTRUCTIONAL STRATEGIES

V. A. 1. a. Students will conduct inspections during the construction process.

b. During the construction process, students should be expected to consult the working drawings to determine if materials and construction techniques are correct and as specified in the plans.

c. Using an illustrated home buyers guide, the instructor will show the difference between the cost of a high quality home and a home with less quality.

2. a. The instructor will discuss how profit and loss are affected by the controlled use of resources.

b. The students will evaluate the completed project to determine ways to increase profit.

B. 1. a. Students will use a simple monitoring device, such as a checklist that a building inspector would use.

b. Students will develop appropriate inspection techniques during the class construction project.

2. a. A designated student will frequently check and compare the construction progress against the plans.

b. Students will record and evaluate the time spent on construction activities.

3. a. One student will keep a list of all the adjustments that had to be made during the construction project. As quality control officer, this student could make reports to the class.

COURSE: CONSTRUCTION SYSTEMS

RESOURCES

PRINT

Burch, M. 1988. Building Small Barns, Sheds and Shelters. Ponnal, VT: Garden Way Publishing.

Dictionary of Occupational Titles 4th Edition. Washington, D.C.: U.S. Government Printing Office, 1984.

Feirer, J.L. & G.R. Hutching. 1986. Carpentry and Building Cconstruction. Peoria, IL: Glencoe Publishing Company. [Student Guide and Teacher's Guide also available]

Henak, R.M. 1985. Exploring Construction. South Holland, IL: Goodheart-Wilcox Company, Inc. [Instructor's Guide, Student Manuals and Activity Packet also available]

Huth, M.W. 1989. Construction Technology. Albany, NY: Delmar Publishers.

Landers, J.M. 1990. Construction. South Holland, IL: Goodheart-Wilcox Company, Inc. [Construction Laboratory Manual also available]

Lux, D.G., W.E. Ray, E.K. Blankenbaker & W. Umstated. 1982. World of Construction. Peoria, IL: Glencoe Publishing Company. [Teacher's Guide, Lab Manuals, Film Strip and Transparency Set also available]

Manufacturing Forum. 418 Harvey Hall, University of Wisconsin-Stout, Menomonie, WI. 54751. Published three times per year, $5.00 per year.

Occupational Outlook Handbook 17th Edition. Washington, D.C.: U.S. Government Printing Office, 1987.

Ramsey, Charles G. and H.R. Sleeper. 1988. Architectural Graphic Standards. NY, NY: Wiley.

Sheldon, R. 1987. Opportunities in Carpentry Careers. Lincolnwood, IL: National Textbook Company.

Sumichrast, M. 1989. Opportunities in Building Construction Trades. Lincolnwood, IL: National Textbook Company.

COURSE: CONSTRUCTION SYSTEMS

Wagner, W.H. 1987. Modern Carpentry. South Holland, IL: Goodheart-Wilcox Company, Inc. [Instructor's Guide, Workbook and Visual Masters also available]

FILMS

"The Foundation" - 30 minutes
"The Wood Shell" - 30 minutes
Available from:
Circle Oak Productions, Inc.
260 Katanah Avenue
Katanah, NY 10536

FILMSTRIPS

Glencoe Publishing Co.
809 W. Detweiller Drive
Department TE/FL 88
Peoria, IL 61615-9990

DCA Educational Products Inc.
Kellers Church Road
P.O. Box 338
Bedmister, PA 18910

Vocational Media and Associates
Box 1050
MT Kisco, NY 10549
1-800-431-1242

PUBLIC TELEVISION

Consult local listings for:
"This Old House"
"The Old Houseworks"
"Hometime"

COMPUTER SOFTWARE

Home Energy Audit
Contact your local power corporation

COURSE: CONSTRUCTION SYSTEMS

APPENDIX A

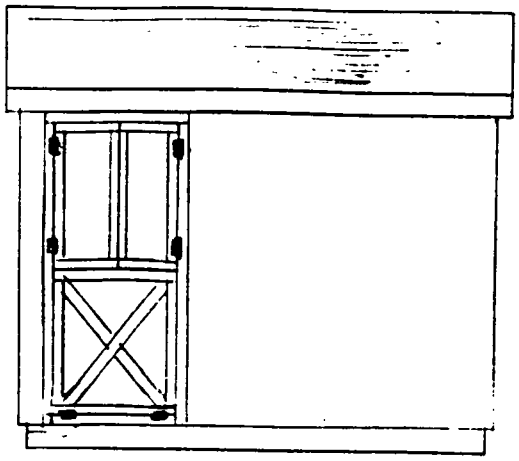

FRONT VIEW

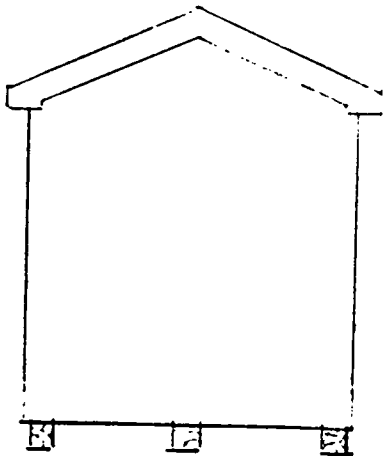

SIDE VIEW

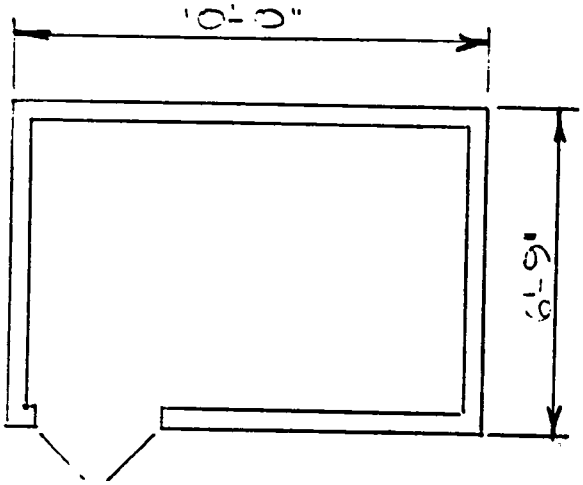

FLOOR PLAN

NOTE: BOTTOM DOOR IS A RAND.
TOP DOORS ARE AS SHOWN.

STORAGE SHED

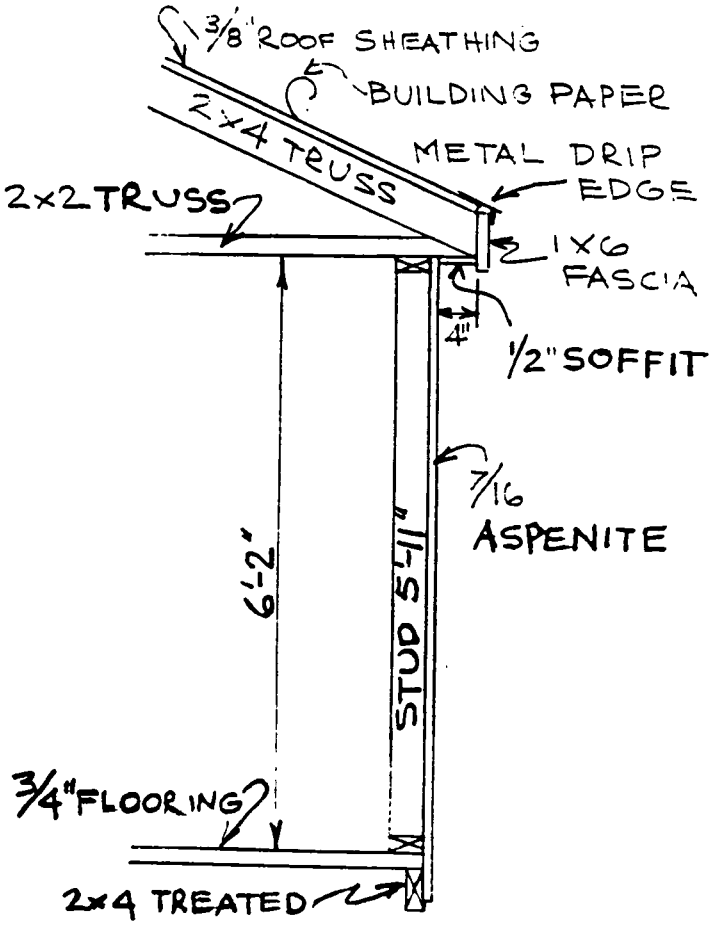

WALL SECTION

3/8 SCALE

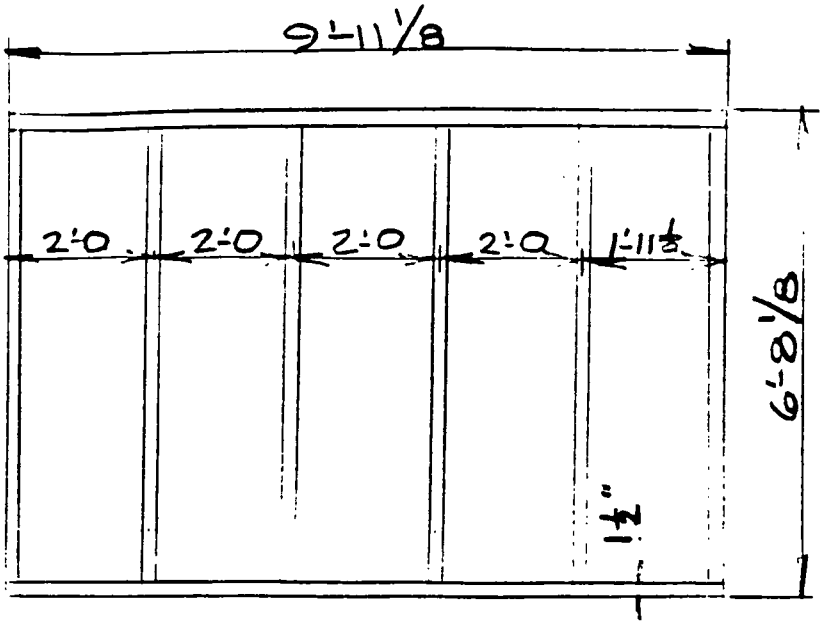

FLOOR JOIST LAYOUT

USE 2x4's
PRESSURE TREATED

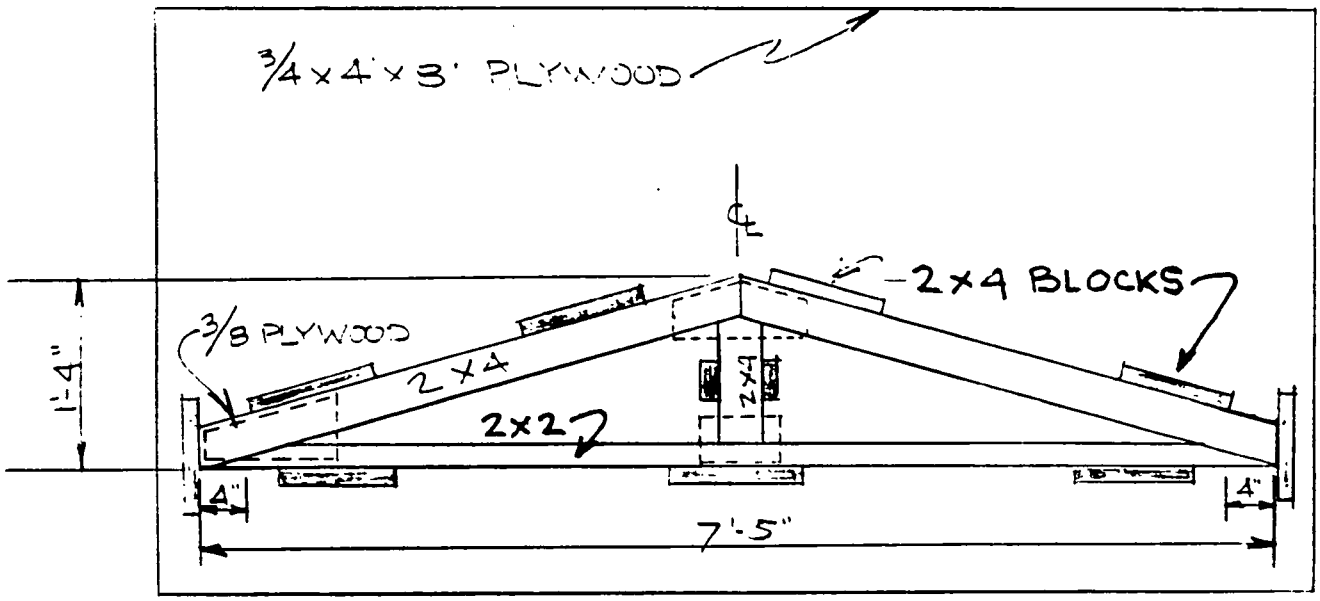

ROOF TRUSS AND LAYOUT BOARD

TRUSSES PLACED 2'-0" O.C.

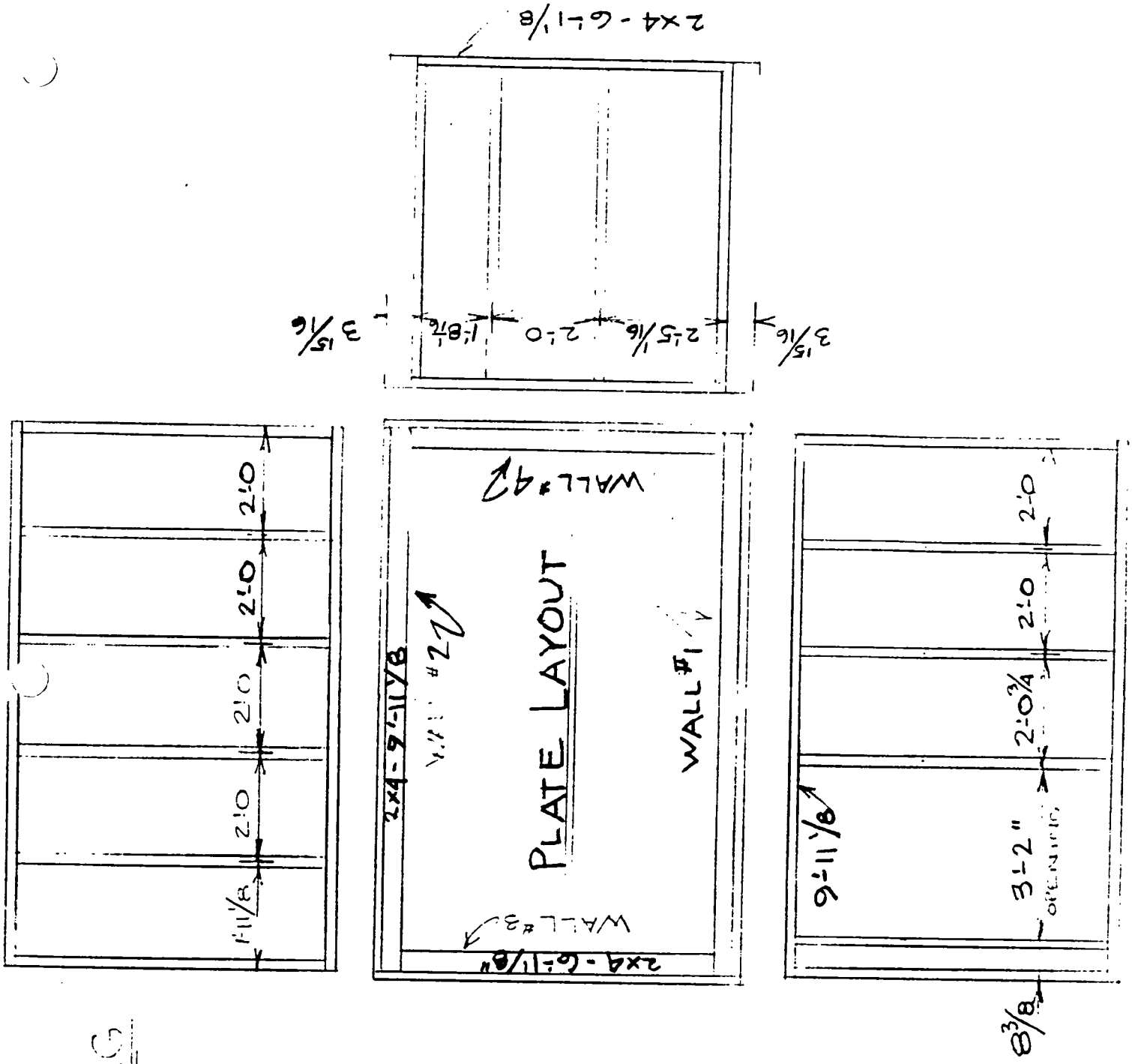

W/ALL FRAMING

ALL FRAMING 2 x 4
ALL STUDS 5'-11

SAME AS
WALL 4

COURSE: CONSTRUCTION SYSTEMS

MATERIAL LIST

FLOOR

2 - 2" X 4" X 10'0" Treated
6 - 2" X 4" X 8'0" Treated
3 - 3/4" X 4' X 8' CDX

WALLS

4 - 2" X 4" X 10'0" Plate
4 - 2" X 4" X 8'0" Plate
20 - 2" X 4" X 8'0" Stud
9 - 7/16" X 4' X 8' Aspenite

DOOR

1 - 3/4" X 4' X 8' Ext.GIS

ROOF

6 - 2" X 2" X 8'0" Lower Truss
6 - 2" X 4" X 8'0" Upper Truss
1 - 2" X 4" X 8'0" Center Piece
4 - 3/8" X 4' X 8' CDX Roof and Gussets
3 - Metal Drip Edges
4 - 1" X 6" X 12'0" Fascia
1 - 1/2" X 4' X 8' Ext. GIS Soffit
1 - Roll Building Paper
5# - 1" Roofing Nails
4 - Bundles Asphalt Shingles

COURSE: CONSTRUCTION SYSTEMS

HARDWARE

7d Common-Floor
16d Common-Walls
7d Coated-Trim, Aspenite
6d Common-Gusset
4-5" T-Hinge Top Doors
2-5" T-Hinge H.D. Bottom Door
1 Hasp
3" Slide Barrel Bolt

COURSE: CONSTRUCTION SYSTEMS

APPENDIX B

TRUSS BARN

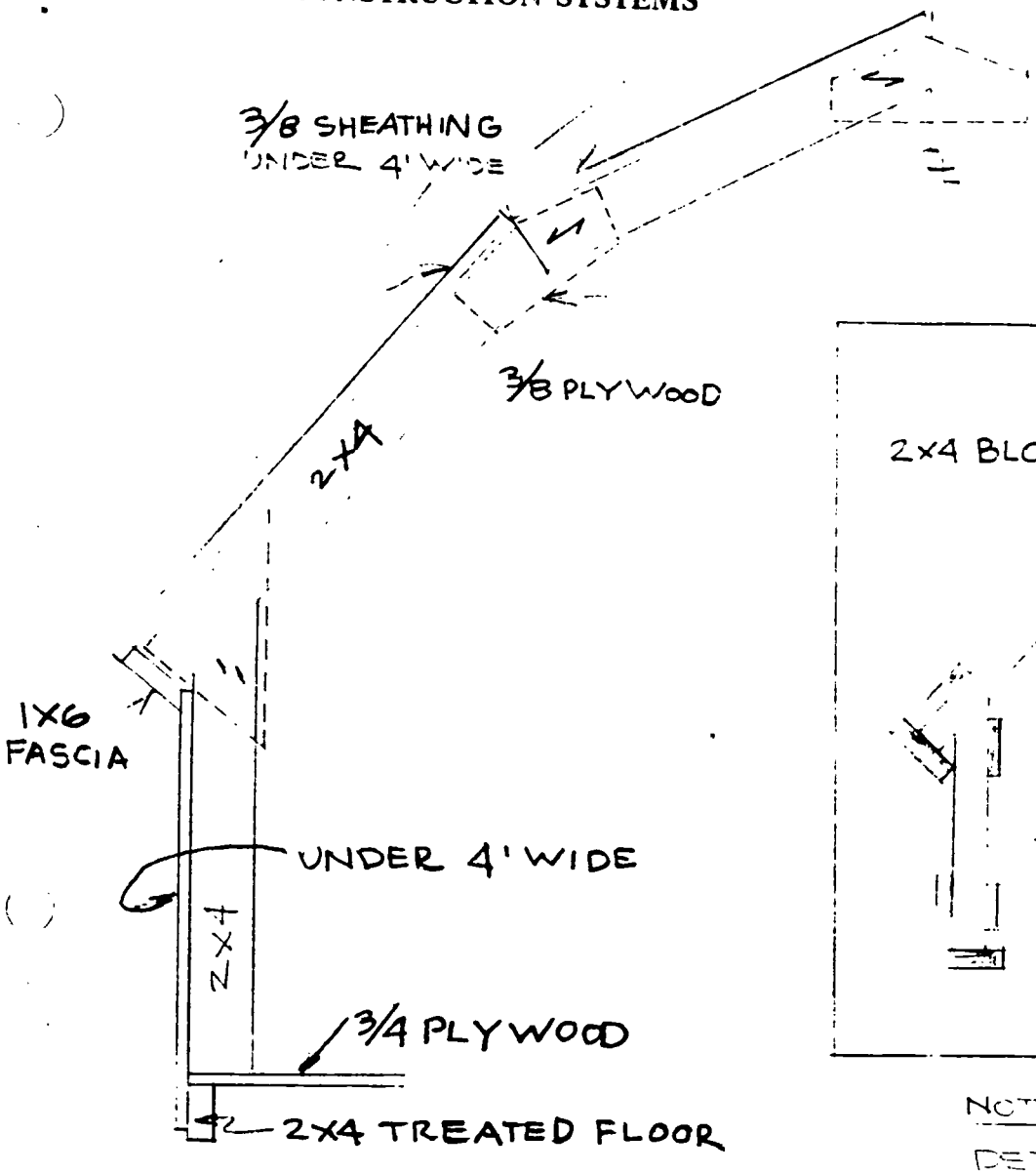

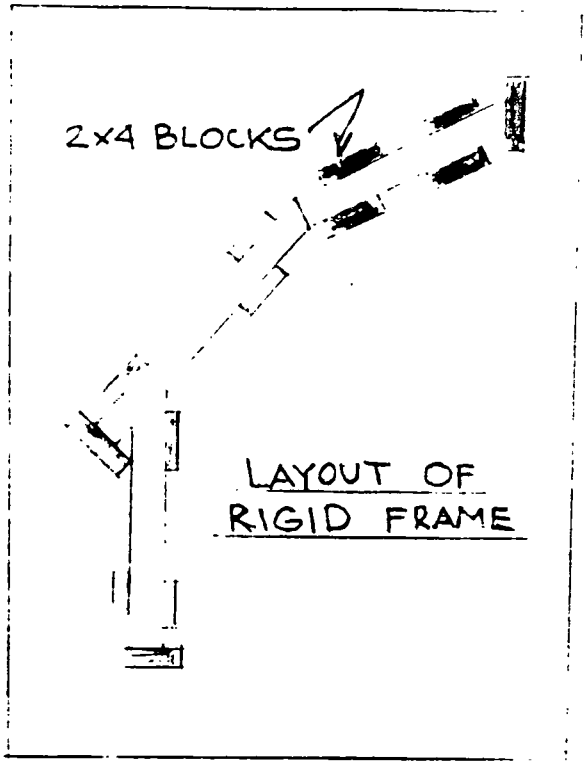

NOTE: SIZE TO BE DETERMINED FROM NEEDS.

ALTERNATE TRUSS SHAPES

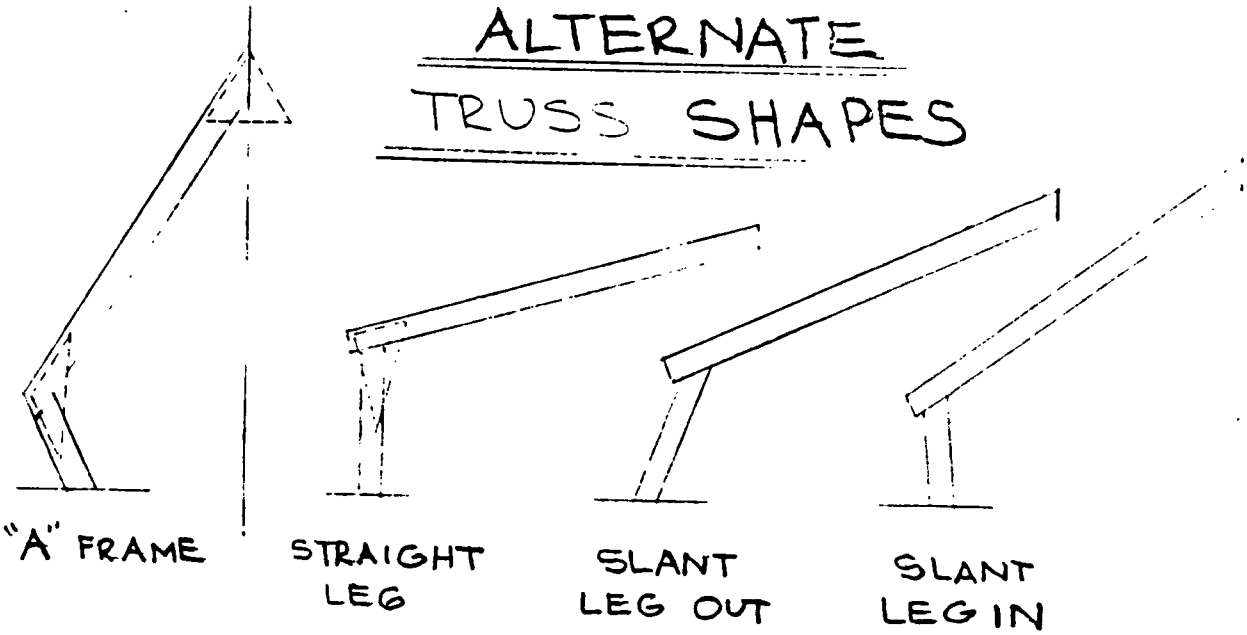

COURSE: CONSTRUCTION SYSTEMS

APPENDIX C

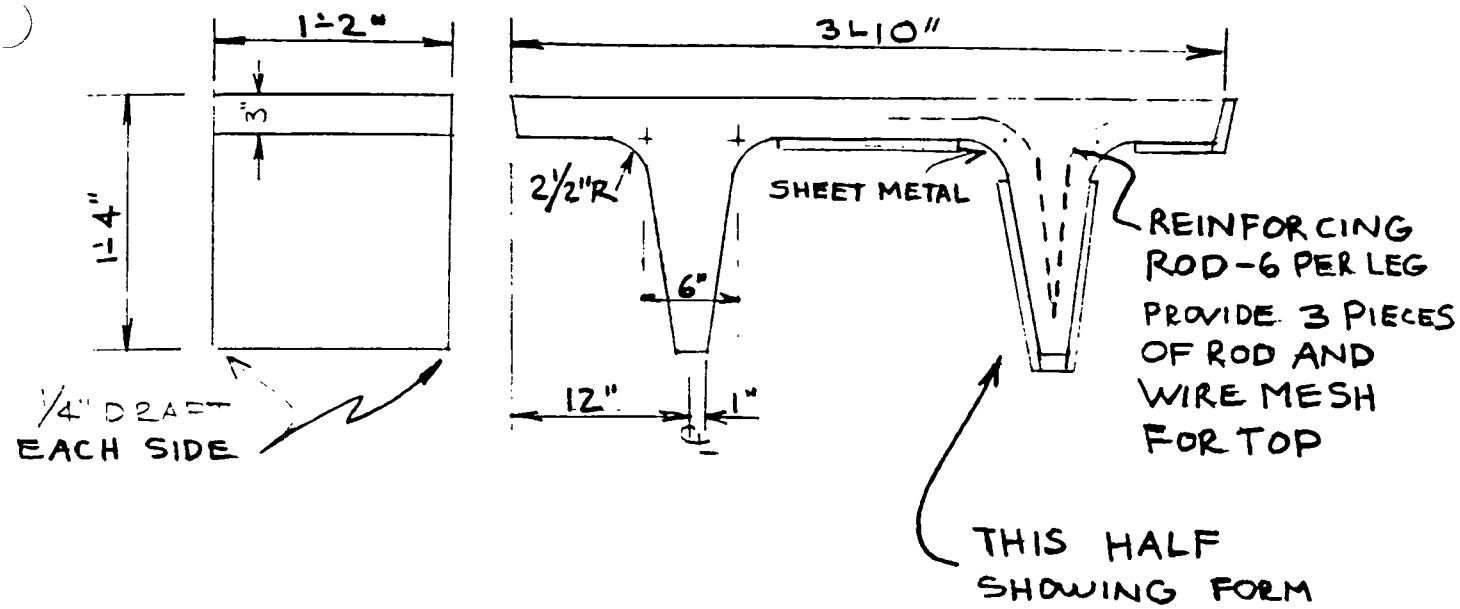

NOTES:
ESTIMATE WEIGHT PER BENCH ABOUT 250#
USE 3/8" ROD
USE OLD ENGINE OIL ON FORM
USE 3/4 PLYWOOD FOR FORM

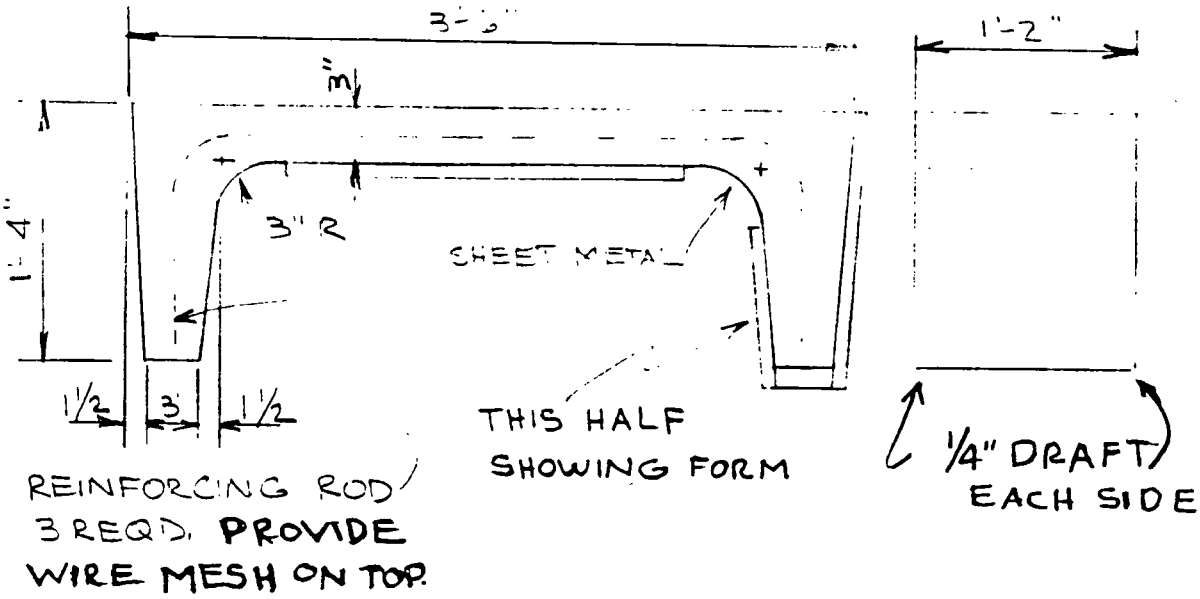

PRECAST CONCRETE BENCHES

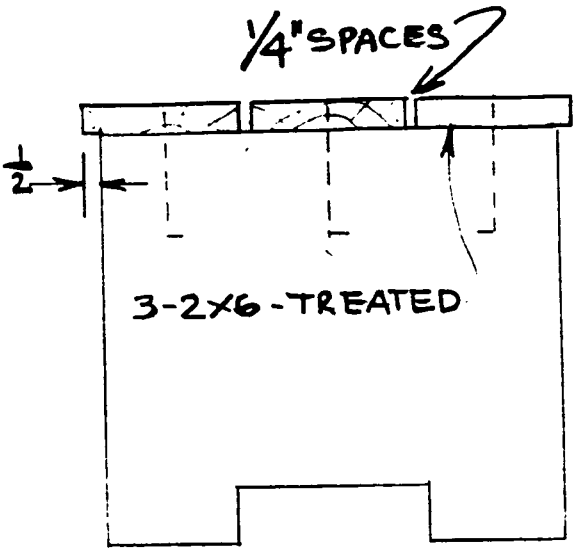

CAST LEG

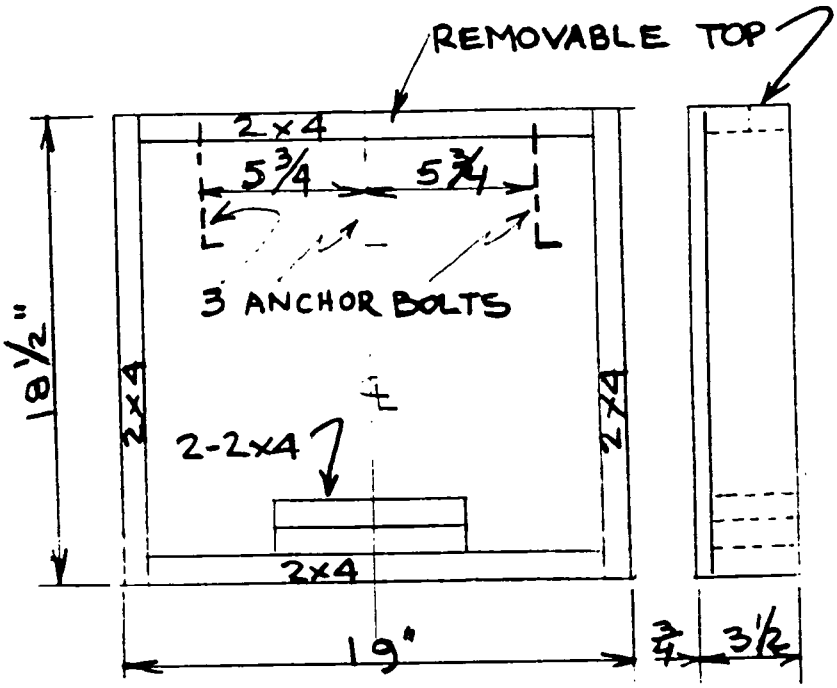

WOODEN FORM

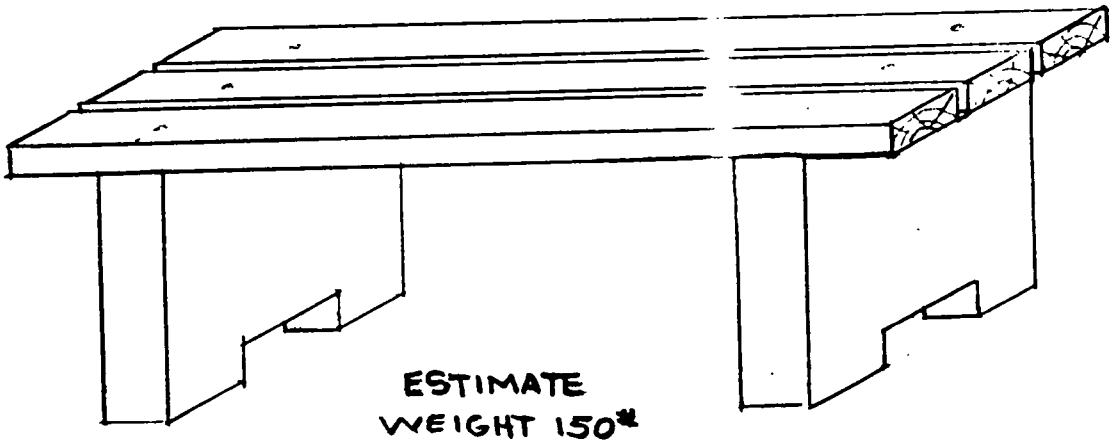

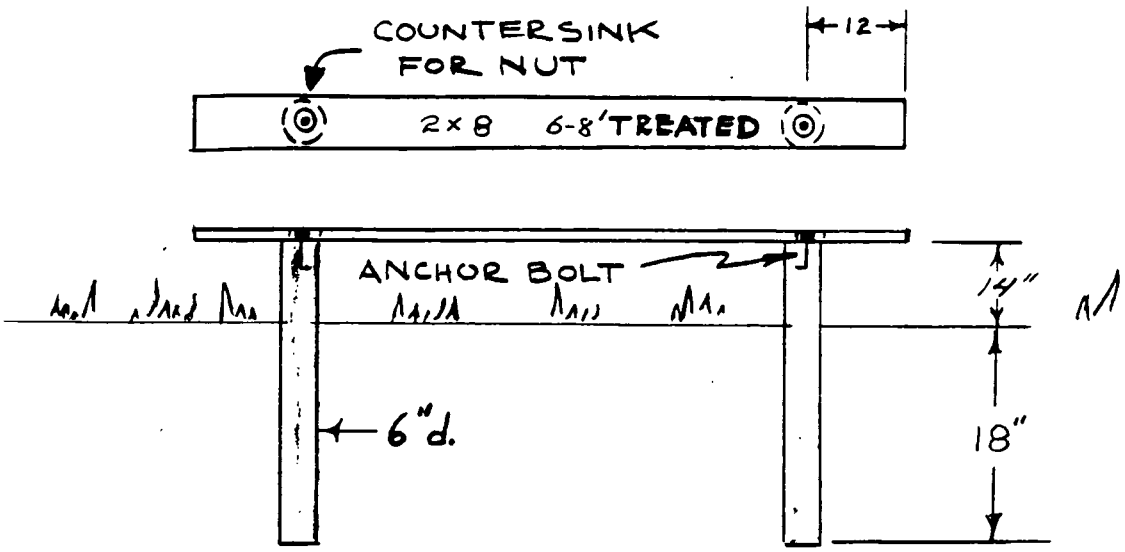

BENCH ON PIERS