TECHNOLOGY EDUCATION
MANUFACTURING SYSTEMS

GRADES 9-12
SYSTEMS COURSE

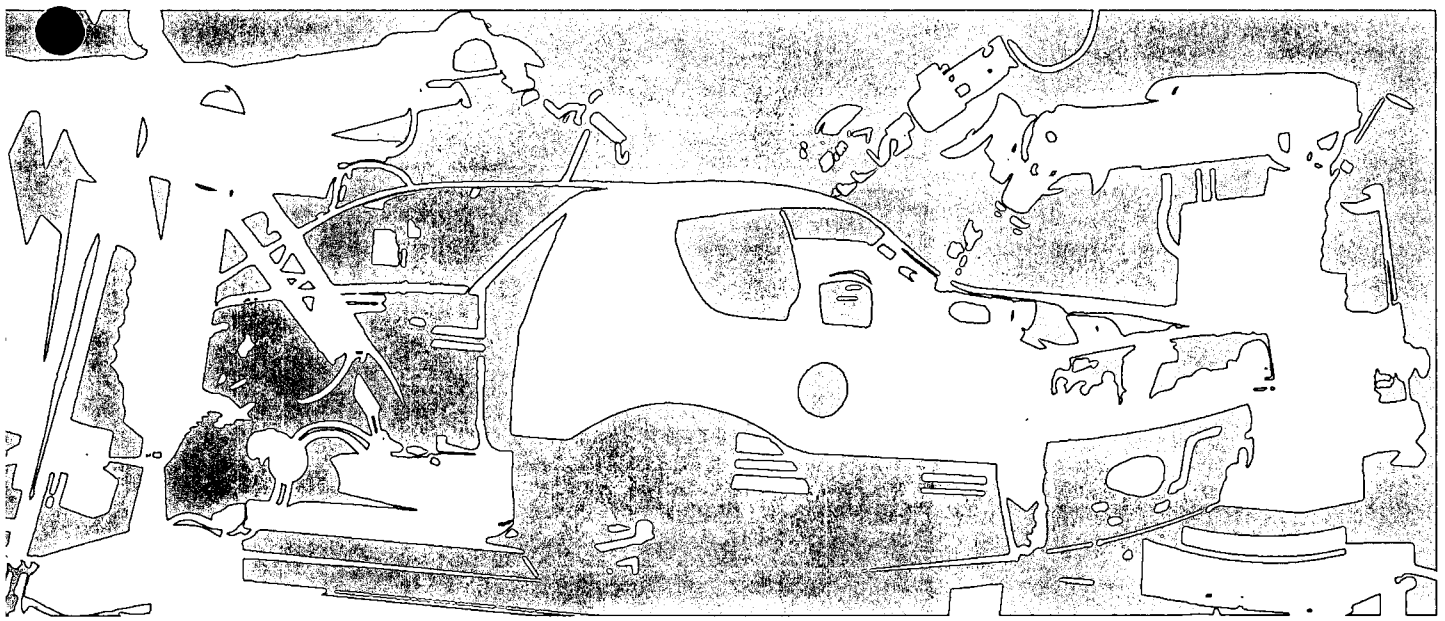

The University of the State of New York
The State Education Department
Bureau of Home Economics
and Technology Education Programs
Division of Occupational Education
Albany, New York 12234

THE UNIVERSITY OF THE STATE OF NEW YORK

Regents of The University

MARTIN C. BARELL, *Chancellor*, B.A., I.A., LL.B	Muttontown
R. CARLOS CARBALLADA, *Vice Chancellor*, B.S.	Rochester
WILLARD A. GENRICH, LL.B.	Buffalo
EMLYN I. GRIFFITH, A.B., J.D.	Rome
JORGE L. BATISTA, B.A., J.D.	Bronx
LAURA BRADLEY CHODOS, B.A., M.A.	Vischer Ferry
LOUISE P. MATTEONI, B.A., M.A., Ph.D.	Bayside
J. EDWARD MEYER, B.A., LL.B.	Chappaqua
FLOYD S. LINTON, A.B., M.A., M.P.A.	Miller Place
MIMI LEVIN LIEBER, B.A., M.A.	Manhattan
SHIRLEY C. BROWN, B.A., M.A., Ph.D.	Albany
NORMA GLUCK, B.A., M.S.W.	Manhattan
ADELAIDE L. SANFORD, B.A., M.A., P.D.	Hollis
WALTER COOPER, B.A., Ph.D.	Rochester
CARL T. HAYDEN, A.B., J.D.	Elmira
DIANE O'NEILL MC GIVERN, B.S.N., M.A., Ph.D.	Staten Island

President of The University and Commissioner of Education
THOMAS SOBOL

Executive Deputy Commissioner of Education
THOMAS E. SHELDON

Deputy Commissioner for Elementary, Middle, and Secondary Education
ARTHUR L. WALTON

Assistant Commissioner for General and Occupational Education
LORRAINE R. MERRICK

Acting Director, Division of Occupational Education
LEE A. TRAVER

Chief, Bureau of Home Economics and Technology Education Programs
JEAN C. STEVENS

The State Education Department does not discriminate on the basis of age, color, religion, creed, disability, marital status, veteran status, national origin, race, gender or sexual orientation in the educational programs and activities which it operates. Portions of this publication can be made available in a variety of formats, including braille, large print or audiotape, upon request. Inquiries concerning this policy of equal opportunity and affirmative action should be referred to the Department's Affirmative Action Officer, NYS Education Building, 89 Washington Avenue, Albany, NY 12234.

COURSE OVERVIEW

Basic human needs for clothing, food and protection lead to our present manufacturing system. In addition, many non-material products improve the standard of living. A thorough understanding of the elements of the manufacturing system enables students to better understand the world around them.

One of the key activities of society is that of production. Production can be defined as the processing of materials and knowledge to make products. Production can be divided into two major categories -- manufacturing and construction. If an object is produced in a factory, the procedure is considered to be manufacturing. If it is produced or assembled on site, it is considered to be construction. Each has its unique concepts and techniques in our technological society.

Manufacturing is organized around the universal systems model with inputs, resources, processes, outputs and control as major categories. These five content organizers have been directly related to manufacturing.

Currently, new developments in such as robotics, "engineering plastics", fiber optics, lasers, and computer-aided design systems are being utilized in manufacturing systems. These developments and automated manufacturing systems are related to careers, worker qualifications, and employment possibilities. New products and the utilization of resources have economic, societal, and environmental impacts. These are all important considerations in the Manufacturing Systems course.

INSTRUCTIONAL METHODOLOGY

This course will require a laboratory equipped with tools and machines essential to student manufacturing project activity. Emphasis should be given to hands-on learning. Approximately 75% of the class time should be devoted to student performance activity. The remaining 25% will be devoted to theory and instruction.

Time is a limiting factor and requires that the instructor carefully structure the course. The content outline provides a complete overview of the topics to be covered. Varying amounts of time can be spent on certain areas depending upon the teacher's plan for implementation of the curriculum. It is expected, however, that each area of the content outline be covered in some way to offer a complete view of the industry.

Safety and career information are extremely important and should be stressed throughout each topic.

Manufacturing Systems is organized around five topics: manufacturing inputs, resources, processes, outputs, and control. These five categories have then been specifically tailored to manufacturing concepts and correlate very closely to the universal systems model.

USE IN SEQUENCE: **Systems course**

This course is one of the New York State approved Systems courses in Technology Education. It is one of five courses designed to give students a firm but broad exploration of the technical world in which they live. Students completing a sequence in Technology Education must have successfully completed any one of these five Systems courses.

This course may also be taken by any student as an elective. If the instructor uses this syllabus as a guide for instruction, students may be granted Regents credit for the experience.

Several courses within Technology Education offerings can be offered on a 1/2-unit or 1-unit basis. Course work earning 1/2-unit must comprise a minimum of 54 hours of instruction and course work earning 1-unit must comprise a minimum of 108 hours of instructional time.

Students with Disabilities

The Board of Regents, through the part 100 Regulations of the Commissioner, the Action Plan, and The Compact for Learning, has made a strong commitment to integrating the education of students with disabilities into the total school program. According to Section 100.2(s) of the Regulations of the Commissioner of Education, "Each student with a handicapping condition as such term is defined in Section 200.1(ii) of this Chapter, shall have access to the full range of programs and services set forth in this Part to the extent that such programs and services are appropriate to such student's special educational needs." Districts must have policies and procedures in place to make sure that students with disabilities have equal opportunities to access diploma credits, courses, and requirements.

The majority of students with disabilities have the intellectual potential to master the curricula content requirements for a high school diploma. Most students who require special education attend regular education classes in conjunction with specialized instruction and/or related services. These students must attain the same academic standards as their non-disabled peers to meet graduation requirements, and, therefore, must receive instruction in the same content areas, at all grade levels. This will ensure that they have the same informational base necessary to pass statewide testing programs and meet diploma requirements.

Teachers certified in the subject area should become aware of the needs of students with disabilities who are participating in their classes. Instructional techniques and materials must be modified to the extent appropriate to provide students with disabilities the opportunity to meet diploma requirements. Information or assistance is available through special education teachers, administrators, the Committee on Special Education (CSE) or student's Individualized Education Program (IEP).

Strategies for Modifying Instructional Techniques and Materials

1. Students with disabilities may use alternative testing techniques. The needed testing modification must be identified in the student's Individualized Education Program (IEP). Both special and regular education teachers need to work in close cooperation so that the testing modifications can be used consistently throughout the student's program.

2. Identify, define and pre-teach key vocabulary. Many terms in this syllabus are specific and some students with disabilities will need continuous reinforcement to learn them. It would be helpful to provide a list of these key words to the special education teacher in order to provide additional reinforcement in the special educational setting.

3. Assign a partner for the duration of a unit to a student as an additional resource to facilitate clarification of daily assignments, timelines for assignments, and access to daily class notes.

4. When assigning long-term projects or reports, provide a timeline with benchmarks as indicators for completion of major sections. Students who have difficulty with organizational skills and time sequence may need to see completion of sections to maintain the organization of a lengthy project or report.

Infusing Awareness of Persons with Disabilities Through Curriculum

In keeping with the concept of integration, the following subgoal of the Action plan was established.

In all subject areas, revisions in the syllabi will include materials and activities related to generic subgoals such as problem solving, reasoning skills, speaking, capacity to search for information, the use of libraries and increasing student awareness of and information about the disabled.

The purpose of this subgoal is to ensure that appropriate activities and materials are available to increase student awareness of disabilities.

This curriculum, by design, includes information, activities, and materials regarding persons with disabilities. Teachers are encouraged to include other examples as may be appropriate to their classroom or the situation at hand.

STUDENT LEADERSHIP SKILLS

Development of leadership skills is an integral Part of occupational education in New York State. The New York State Education Department states that, "Each education agency should provide to every student the opportunity to participate in student leadership development activities. All occupational education students should be provided the opportunity to participate in the educational activities of the student organization(s) which most directly relate(s) to their chosen educational program."

Leadership skills should be incorporated in the New York State occupational education curricula to assist students to become better citizens with positive qualities and attitudes. Each individual should develop skills in communications, decision making/problem solving, human relations, management, and motivational techniques.

Leadership skills may be incorporated into the curricula as competencies (Performance Objectives) to be developed by every student or included within the Suggested Instructional Strategies. Teachers providing instruction through occupational educational curricula should familiarize themselves with the competencies. Assistance may be requested from the State advisor of the occupational student organization related to the program area.

Students who elect to become active members of one of the student leadership organizations chartered by the New York State Education Department have the advantage of the practical forum to practice leadership skills in an action oriented format and have the potential for recognition of their achievements at the local, State, and national level.

SKILLS, KNOWLEDGE, AND BEHAVIORS TO BE DEVELOPED

The student will be able to:

1. Identify the universal systems model as it relates to manufacturing technology.
2. Assess the importance of manufacturing technology to society in the manner that it provides man with useful articles for everyday life.
3. Delineate the necessary inputs and resources for manufacturing in our current society.
4. Analyze and demonstrate various processes of manufacturing technology.
5. Evaluate the products and impacts of a manufacturing enterprise as to their quality and also their effect on the society and environment.
6. Utilize mathematical and scientific principles in the solving of practical manufacturing problems within the laboratory setting.
7. Demonstrate problem solving and analytical thinking skills in solutions to simple engineering problems within the context of laboratory activities.
8. Develop hand and machine tool skills.
9. Demonstrate the knowledge of the safe use of machines, tools and materials.

COURSE: MANUFACTURING SYSTEMS

CONTENT OUTLINE

		Estimated Learning Time
I.	**System Command Input**	**2 hours**

A. Desired project
   1. Product selection
   2. Product specifications
   3. Pre-production planning

B. Expected impacts (environmental, economic, societal, personal)

II.	**Resources for Manufacturing**	**16 hours**

A. People
   1. Job classification/career preparation
   2. Organizational structure
   3. Recruitment

B. Information
   1. History
      a. Handcrafting
      b. Mechanization/Automation
   2. Safety
   3. Technical knowledge
      a. Research and development
      b. Planning
      c. Engineering

C. Materials
   1. Raw material sources
   2. Conversion from raw materials to industrial materials
   3. Procurement
   4. Comparative characteristics

D. Tools/machines
   1. Function/selection
   2. Operating techniques
   3. Maintenance

E. Capital
   1. Sources
   2. Disbursement

F. Energy
   1. Types
   2. Applications

G. Time
   1. Quantity
   2. Management

III. Processes of Manufacturing **28 hours**

A. Forming
   1. Casting/molding
   2. Compressing/stretching

B. Separating
   1. Shearing
   2. Chip removal
   3. Non-traditional

C. Combining
   1. Mechanical fastening
   2. Adhesion/cohesion
   3. Mixing
   4. Coating
   5. Assembling

D. Conditioning
   1. Thermal, chemical, and mechanical
   2. Applications

IV. Outputs of Manufacturing — 2 hours

A. Products
1. Packaging
2. Distribution
3. Reclamation
4. Servicing

B. Impacts
1. Environmental
2. Economic
3. Societal
4. Personal

V. Control of Manufacturing — 6 hours

A. Reasons
1. Quality assurance
2. Profitability

B. Methods
1. Monitor outputs
2. Compare outputs with inputs
3. Adjust processes

Total Estimated Learning Time: 54 hours

GENERAL INSTRUCTIONAL STRATEGIES

Sample instructional strategies are described in the section that follows, but they may appear somewhat fragmented without a description of the overall plan for the course.

Two types of activities are encouraged; group and individual.

Individual laboratory activities are useful in reinforcing learning about the various processes of manufacturing. Teachers may wish to employ specific laboratory activities that involve one or more processes such as forging, heat treating, injection molding and result in the creation of individual products.

Group activities center around the organization and operation of an actual manufacturing company that will set up a production line to actually produce, and possibly sell, the chosen product. Some other general strategies for this enterprise would include:

1. **Activity section.** The selection of any activity or product should be designed to fulfill the requirements of the course performance objectives and not solely rely on the needs of the school and community, or on the whims of the students.

2. **Appropriate product.** The instructor must consider the ability level of his/her students, so that products of an appropriate degree of difficulty are chosen. Students will often choose a product that is too difficult, due to their naivete. The emphasis should be placed on the organization and manufacturing aspects of the product, even the simplest product can present some very difficult and time consuming problems. It is very important that products be completed within the limits of the students' stamina and course time constraints.

3. **Instructional sequence.** The display of the course outline in this document might suggest a sequential teaching strategy. Although this may be true to some extent, it is not absolutely necessary. The instructor may decide, for instance, to offer instruction on quality control early in the semester, even though it is listed at the end of the content outline. The sequence of topics can be changed to facilitate the individual teaching plans of the instructor and the laboratory equipment, although all the performance objectives must be accomplished to complete the syllabus satisfactorily.

4. **Time management.** The instructor should manage the allotted time for the course with flexibility to make up for problems that occur during the production. Nothing is more frustrating for students than not to finish the production of a product they have taken so long to design and organize.

The five topics identified in the content outline; command input, resources, processes, outputs, and control, are not equal in terms of the amount of time to be devoted to each topic. A suggested division of time might be:

TOPIC	INSTRUCTIONAL TIME
System Command Input	5% (approximately **2 hours**)
Resources for Manufacturing	30% (approximately **16 hours**)
Processes of Manufacturing	50% (approximately **28 hours**)
Outputs of Manufacturing	5% (approximately **2 hours**)
Control of Manufacturing	10% (approximately **6 hours**)
	Total: 100% (approximately 54 hours)

Time is based on three hours per week multiplied by 18 weeks of instructions.

5. **Tool skill.** Tool skill is a very important part of the success of the activity associated with this module. The instructor should identify the tools required to fulfill the activity and spend a sufficient amount of time to assure that the students have the necessary technical and safety skill on those selected tools. If this means a week or more of instruction on the tools, the instructor should reschedule time in the remainder of the course to comply with other performance objectives.

6. **Field trips.** A field trip to a manufacturing plant is an excellent strategy for accomplishing many of the objectives in rapid succession.

7. **Slides.** Color, 35mm slides provide an easy and valuable way for the instructor to bring a manufacturing plant to the laboratory. They are particularly useful if field trips are not possible, but both strategies together can provide a powerful experience for students.

8. **Prototypes.** If time allows, individual, or groups of students may be asked to design and build a prototype of a possible product. The class may then vote on the product they would like to market and sell.

9. **Number of products.** The instructor should decide on the size of the production run ahead of time. Will just enough products be produced so each class member receives one? Will they be sold to the school community? Will they be offered to the entire town? The scale of the production will require management of many variables.

10. **Written responses.** Several of the curriculum objectives can be completed by written reports. The instructor is encouraged to offer these assignments as homework. This will allow the maximum amount of available laboratory time for actual hands-on production.

11. **Computer graphics.** The use of computer programs for the design and engineering of plans is a popular technique used today. Instructors may demonstrate this software if the equipment is available.

12. **Sample instructional strategies.** Many more instructional strategies are listed after the performance objectives than can normally be accomplished by the instructor. They are offered as "idea stimulators" for the teacher, and should be considered as such. They have also been arranged so the Strategy "A" corresponds with Suggested Performance "A". This matching of competencies is offered as a convenience to teachers.

13. **Hands-on activity.** The success of the course and the level of student motivation is effected by the amount of hands on activity. A goal of 25% instructional time and 75% hands-on activity should therefore be implemented.

COURSE: MANUFACTURING SYSTEMS

PERFORMANCE OBJECTIVES/SUPPORTING COMPETENCIES*

I. *System Command Inputs*

Suggested Instructional Time: 2 hours

A. The student will identify a product for the manufacturing enterprise.

In order to do this, the student must be able to:

1. Select a product based on the limiting factors of market, time, capital, labor, and facilities.

2. Produce a list of required specifications for the chosen product.

3. Simulate steps involved in pre-production planning, including research and development, market surveys and cost analysis.

B. The student will predict possible impacts of their manufacturing enterprise.

In order to do this, the student must be able to:

1. Recognize critical anticipated relationships that exist among environmental, economic, societal, and personal impacts.

* NOTE: Each performance objective is written without specific reference to criteria for evaluation. The minimum performance level is left to the discretion of the instructor, due to the diversity of the student population to be served (low achievers, average, high-achievers, special) and the range in grade-level for this offering.

SUGGESTED INSTRUCTIONAL STRATEGIES

I. A. 1. a. The instructor will have several examples of class manufacturing runs available for the students to see. Some of the pros and cons of each should be discussed. Some of the aesthetic elements of each design may be left up to the students to complete.

b. The class as a whole should discuss the factors that limit the size and complexity of a class enterprise, such as, time, space, capital resources, available materials, available equipment, experience of the available labor, and market.

2. a. The students individually, and then as a group will complete a list of specifications for the chosen product, based on the limiting factors.

3. a. With the instructor as a resource, the students will complete all the planning for the production run, taking into account the many variables that must be considered.

b. The class as a whole or as smaller "design groups" may brainstorm product ideas. These ideas can later be refined into specific product plans.

c. Individual students or "design teams" may produce product mock-ups for presentation to the class. This activity may be run as a contest with a prize for the winning design, or a small royalty percentage of the final company profits.

I. B. 1. a. The students might brainstorm a list of possible impacts that the manufacturing of their product might have regarding environmental, economic, societal and personal concerns. This may be done with the entire class, or with small groups that report their findings back to the class as a whole.

b. The class may be divided into small groups that research individual aspects of each type of impact and report back to the class.

COURSE: MANUFACTURING SYSTEMS

PERFORMANCE OBJECTIVES/SUPPORTING COMPETENCIES

II. *Resources for Manufacturing*

Suggested Instructional Time: 16 hours

A. The student will analyze the preparation and utilization of people as a resource for manufacturing.

In order to do this, the student must be able to:

1. Analyze different job classifications common to the manufacturing industry and the career preparation required.

2. Describe the structure used in organizing personnel of a manufacturing company.

3. List the methods that are employed by industry to recruit and train people necessary for the enterprise.

B. The student will demonstrate the ability to utilize the resource of technical and historical information in the safe production of their product.

In order to do this, the student must be able to:

1. Identify major historical developments in hand-crafting, mechanization, and automation.

2. Perform in a safety program to set safety standards on a daily basis, 100% of the time.

3. Identify and utilize the R & D, planning and engineering techniques in the manufacture of their product.

C. The student will describe the utilization of materials in a manufacturing enterprise.

In order to do this, the student must be able to:

1. Identify the sources of common raw materials.

2. Explain the processes of converting raw materials into industrial materials.

3. Discuss the methods of procuring industrial materials and supplies for a product.

4. Classify the comparative characteristics of industrial materials.

D. The student will demonstrate basic operating principles of tools and machines.

In order to do this, the student must be able to:

1. Select the proper tool or machine to perform a given function.

2. Demonstrate the safe and proper operation of the tools and machines in the laboratory situation.

3. Exercise the proper care and maintenance of tools and equipment.

E. The student will explain the process of accessing the need for capital and finances in the development and completion of manufactured products.

In order to do this, the student must be able to:

1. Identify several sources of capital.

2. Describe how finances are dispersed.

F. Students will identify the various types of energy commonly used in the manufacturing process and determine the best type for a specified task.

In order to do this, the student must be able to:

1. List the common types of energy used by a manufacturing enterprise.

2. Apply given energy sources to tasks to be performed.

G. The student will explain why time is a necessary resource to the manufacturing process, and that it must be apportioned to achieve an efficient and profitable enterprise.

In order to do this, the student must be able to:

1. Analyze the quantity of time required for his/her manufacturing enterprise.

2. Manage available time so that the manufacturing enterprise will be successful and profitable.

SUGGESTED INSTRUCTIONAL STRATEGIES

II. A. 1.

a. Students will use the Dictionary of Occupation Titles and the Occupational Outlook Handbook to look up career information. (Obtain books from Guidance Department.)

b. The instructor or the library specialist may demonstrate the use of the computer terminal to access the GIS Program (Guidance Information System) and retrieve information regarding specific job titles, career preparation, and preparation institutions.

c. Students will interview a worker (parent, relative) to determine job duties, educational preparation, opportunities advantages and limitations.

d. Students will roleplay different personnel positions (e.g., given a position and a specific situation, the student will participate in that role.)

e. Students will write a job description for the part/role they played in the class corporation.

2. a. Students will examine the personnel charts of various organizations and describe the line of authority. Suggestions: (1) large business, (2) the school system, (3) the lab personnel system for cleanup.

   b. Students may be asked to write letters to manufacturing concerns requesting an organization chart that can be used in discussion and/or as a model for establishing a student company.

   c. The instructor will plan a personnel system to be used with a student corporation.

3. a. Under the guidance of the instructor, students may develop a list of characteristics that employers like workers to exhibit.

   b. Students will look in the classified ads of the local newspaper for employment/job descriptions.

   c. Students may be assigned to small groups, provided a sample product, and instructed to develop a personnel plan which includes a list of all employees needed and any special training required.

II. B. 1. a. The instructor may deliver a lesson using transparencies to outline the major developments prior to the Industrial Revolution. The lesson would be directed toward evolution of processes rather than memorization of names and dates.

   b. The instructor will display a collection of drawings to show human development through use of tools (e.g., spear, plow, hammers).

   c. The instructor will distribute a list of selected events, technological discoveries, and inventions (not in chronological order) that occurred before the Industrial Revolution and have students place them in order.

   d. The instructor will discuss the evolution of cottage crafts in the Pre-Industrial Revolution. Divide the class into groups of four or five and have them discuss and choose a particular cottage craft that the groups would like to make. Students will report to the class the items they have chosen.

e. Students will select or be assigned a technology/science fair project as an individual activity.

2. a. The instructor should be a prime source of role modeling when it comes to the safe operation of tools and equipment. The instructor should provide demonstrations on the care and use of tools and equipment and set the tone for a safe working atmosphere.

b. Students may be required to demonstrate their knowledge and preliminary skill in the operation and/or use of equipment or hand tools, through a series of safety quizzes and practical tests, under the instructor's direct supervision.

c. Students should follow a uniform "qualifying procedure" when learning to use a machine.

d. Students will make up a laminated plastic ID card that can be punched to indicate that they are machine qualified. These can be worn to show names and identify students for roll call.

e. A designated student safety inspector will watch for adherence to safe working practices on tools and machines.

f. Students will conduct a monthly safety inspection. (Teacher may purposely "hide" some infractions for students to find.)

II. B. 3. a. Small "design teams" will select a product, develop working drawings and construct a model to be presented to the class.

b. Students will conduct a market survey of a proposed product, using working models or prototypes. Each student will interview prospective customers and gather data about consumer demand, product feasibility, and product design.

c. Students will enter and build a "competitive engineering project" for a AIAA Metric 500 ASME competition.

d. Students may identify the need for, and construct necessary jigs and fixtures for the class production. Time may demand that much of the "tooling up" for production be done by the instructor.

II. C. 1. a. Students may explore the possibility of extracting raw materials located on school grounds or within their own neighborhood for conversion to industrial materials. Examples may include: clay, sand, gravel, trees, and plant life.

b. The instructor will display a collection of raw materials such as types of wood, and mineral samples.

2. Students may be involved in a lab activity of converting locally procured raw materials into industrial products.

3. The instructor will assign an activity of procuring industrial materials for the manufacture of a product, given a list of standard stock items and manufacturers' product guides.

4. a. Students will examine a variety of manufactured products to determine what materials were used in their fabrication, and assess what characteristics were important to their inclusion in that product.

b. Students will be asked to determine the best material for a given part of the class production based on a comparative characteristic study.

c. The instructor will develop simple testing devices to show the comparative characteristics of materials, such as, flexibility, elasticity, hardness, corrosion resistance, tensile strength, compression strength, shear strength, etc.

d. Students will perform various types of testing and data gathering. Examples to be considered include: test of tensile strength of materials, strength of adhesives, strength of joints in wood products, methods of fastening, etc.

II. D. 1. a. The instructor will provide an activity where hand tools and equipment are numbered. Given a list of names and uses, students will then match the number of the tool or equipment with the proper name and use.

b. Given the choice of a variety of machines or tools that will perform similar functions, the students should determine which of those machines or tools will best perform a given task. For example, given a table saw, band saw, jig saw, electric miter box, and portable power saws, the student will utilize the machine(s) that will provide the best picture-frame miter.

2. The instructor will demonstrate the proper use of hand tools and equipment. Students may then participate in a line-production activity where this learning about hand tools and equipment can be applied.

3. a. The students' lab activity requirement may include a specific amount of time to perform maintenance of hand tools and equipment.

b. The instructor will demonstrate methods of sharpening, cleaning, and storing tools for over a vacation period.

c. Students will repair a tool from home, e.g., remove rust; sharpen; weld; heat treat; grind a plane blade, chisel, or screwdriver; sharpen scissors; repair handles.

II. E. 1. a. The instructor will set up a competitive situation between groups in the class to research and develop a list of sources of capital within a specified time limit. A master list may then be developed using ideas from each group.

b. Students will collect clippings from the financial section of local newspapers. Highlight "new" industry that will mean additional jobs.

c. Students will select a common stock from those listed on the New York Stock Exchange and chart its progress for several weeks.

d. Students will sell stock for the class enterprise.

e. Students will select a manufacturing corporation, and send for a prospectus that can be studied and compared with others received by classmates.

f. Students will examine sources of capital for the class enterprise such as loans and grants.

2. a. Students will utilize an accounting system for the class industry.

b. Students will make predictions of the break-even point for the class industry.

c. Students will develop a plan to distribute company profits at the conclusion of the class manufacturing enterprise.

II. F. 1. a. Students will telephone representatives of various utilities to gather data on utility availability, cost, and other pertinent factors.

b. The instructor will arrange for a tour of the school so that students may observe firsthand the complex utility systems.

2. a. The class will analyze different energy sources used to perform a given task (for example, heating a house with electricity, wood, gas, oil, or coal).

b. The class will discuss why certain industries are located in close proximity with the power source.

c. Students will identify the sources of energy used during their manufacturing enterprise.

II. G. 1. a. The class will draw a flowchart to show the movement of parts, sub-assemblies, storage points, etc., during the class manufacturing enterprise.

b. Students will conduct a time study to improve the efficiency of a given task (e.g., use a fixture to cut a part to size instead of measuring constantly. A student will cut 10 parts to length by measuring each piece versus another student using a stop block on the fence of a radial arm saw.)

2. a. Students will establish a time line to apportion the time available to each of the tasks that must be performed (e.g., the flow of parts, pre-production planning and tooling up for production, production and packaging, and distribution).

   b. Following the manufacturing exercises, students will discuss the ways and means in which time might have been saved.

   c. Students will calculate the direct labor cost for each of the student manufactured products and discuss ways in which the labor costs could be reduced.

PERFORMANCE OBJECTIVES/SUPPORTING COMPETENCIES

III. *Processes of Manufacturing*
Suggested Instructional Time: 28 hours

A. Students will synthesize the general processes of forming materials.

In order to do this, the student must be able to:

1. Identify and/or demonstrate techniques for casting/molding.

2. Explain and/or show techniques for compressing/stretching materials.

B. The student will synthesize the general processes of separating materials.

In order to do this, the student must be able to:

1. Identify and/or demonstrate techniques for shearing materials.

2. Explain and/or show techniques for chip-removal processes.

3. Describe and/or use techniques for the non-traditional methods of separating materials, such as flame cutting, controlled fracture cutting, and laser cutting.

C. Students will synthesize the general processes of combining materials.

In order to do this, the student must be able to:

1. Identify and/or demonstrate techniques used for mechanical fastening.

2. Explain and/or show techniques used in the adhesion and/or cohesion of materials.

3. Describe and/or use techniques in mixing materials.

4. Identify and/or show techniques for coating materials.

5. Demonstrate and/or explain techniques for assembling materials and components.

D. Students will analyze the conditioning processes used in manufacturing.

In order to do this, the student must be able to:

1. Describe thermal, chemical, and mechanical conditioning techniques, such as heat treating, rolling, plasticizing, drying, and etching.

2. Select the appropriate conditioning technique for an application.

SUGGESTED INSTRUCTIONAL STRATEGIES

III. A. 1. a. The instructor will provide a product with several components to be disassembled, and require students to identify which components were produced by the casting/molding process.

b. Students will make castings using various materials, e.g., hot metals, concrete, plaster, clay polyester, plastisol, etc.

c. Students will prepare a mold for casting; e.g., out of sand, plaster, rubber, or vacuum formed plastic.

d. Students will make a product employing molds and polystyrene expandable beads.

e. Students will injection mold the handle for a shop produced screw driver blade.

2. a. Given specific items formed by stretching/compressing techniques, students will identify the process, equipment and materials used and to explain how the techniques are accomplished.

b. Students will produce a vacuum formed sign.

c. Students will bend a product, or parts, using commercial bending machines or a lab-made jig.

d. Students will forge a project, e.g., a screwdriver, chisel, awl, etc.

III. B. 1. a. The instructor will demonstrate various methods of shearing.

b. The instructor will design a required project that will provide students experience with the use of the shearing process.

2. a. The instructor will set up a simple production line with jigs and fixtures where students may experience several chip-removal processes.

b. The instructor will demonstrate the use of hand tools and power tools to compare the efficiency and accuracy when drilling, sawing, milling, etc.

3. a. The instructor will arrange a field trip to a local high technology facility where students can observe non-traditional separating methods, such as laser beam milling, electrical discharge machining (EDM), electro-chemical machining (ECM), etching, etc.

b. Students may participate in the production of a printed circuit board which is to be screen printed with a resist and chemically etched to produce a circuit.

c. The instructor will show films to demonstrate non-traditional methods of separating materials (e.g., EDM, laser cutting, etc.).

d. The instructor will demonstrate or design a project that requires glass cutting techniques.

III. C. 1. a. Students will research a particular mechanical fastening technique and report to the class the advantages and limitations of the fastener.

b. The instructor may provide a laboratory activity where each student will experience mechanical fastening techniques through the completion of experimental samples.

c. The instructor will display a collection of common fasteners used in the lab.

d. Students will compare the advantages of nailing versus the use of wood screws.

e. Students will use mechanical fasteners in a class or individual product.

2. a. Students will identify and list adhesion and/or cohesion methods used in their home.

b. The class will compare adhesive strengths on similar pieces of wood by tensile and/or shear testing techniques.

c. Students will make a product to demonstrate cohesion techniques, e.g., a laminated plastic card.

d. The instructor will demonstrate and allow students to weld a sample piece.

e. Students will make a cohesive lamination using acrylic and a heated hydraulic press.

f. Students will employ adhesion and/or cohesion techniques in the manufacture of individual or class products.

III. C. 3. a. Students will measure and mix ingredients for a plaster cast or concrete casting (see pages 41-46).

b. Students will mix polyester resin with required amount of MEKP catalyst to pour a casting, or use body filler to patch.

c. Students will mix ingredients to make a custom glaze; test fire and then evaluate.

4. a. The instructor will demonstrate techniques for coating materials, and have students apply them through product application.

b. The instructor will make a demonstration board to show a variety of coating treatments.

c. Students will apply rust-proofing paint, reflective paints, absorbing paints; then compare qualities.

d. Students will silk screen a sign using reflective coating and bead application.

e. Students will use plastisol or organosol to coat handles of tools. They will apply coatings using the fluidized bed coating techniques for plastic.

f. Students will test for the abrasive resistance of various applied coatings.

5. a. The instructor may explain and demonstrate procedures for the assembly of components into final products in preparation for line production.

b. Students should obtain assembly instruction on consumer products that require some assembly, such as bicycles, toys, etc., and analyze the difficulty or ease of assembly based on the instructions provided.

III. D. 1. a. The instructor will demonstrate the technique used to condition tool steel to a specific hardness and temper.

b. The class will examine the comparative characteristics of seasoned and unseasoned wood.

c. Students will examine the change in structure of fired and unfired clay products.

d. The instructor will demonstrate the result of adding catalysts to polyester or epoxy resin.

e. Students will examine the effects of work hardening by repeatedly bending a copper wire or paper clip.

2. a. Students will produce a screw driver, heat treat the blade after forging.

b. Students will produce a product, such as a mirror, decorate by chemically or mechanically etching the glass.

c. Students will sand blast a design on a mirror or glass.

PERFORMANCE OBJECTIVES/SUPPORTING COMPETENCIES

IV. Outputs of Manufacturing
Suggested Instructional Time: 2 hours

A. The student will explain the importance of packaging, distributing, reclaiming, and servicing manufactured products.

In order to do this, the student must be able to:

1. Describe the importance of packaging as it relates to marketing and protection of the product.

2. Identify the systems and methods of distributing materials and products.

3. Assess the significance of the reuse and/or reclamation of manufactured products.

4. Recognize that proper installation, preventive maintenance, and repair are essential elements in the servicing of a manufactured product.

B. The student will interpret the environmental, economic, societal, and personal impacts connected with manufacturing products.

In order to do this, the student must be able to:

1. Explain the possible effects that the manufacturing of products may have upon the environment.

2. Determine the economic impacts that manufactured products may have on the economy.

3. Describe the societal impacts that might occur due to a manufacturing enterprise.

4. Analyze the effects that manufacturing may have upon the individual.

SUGGESTED INSTRUCTIONAL STRATEGIES

IV.A. 1. a. Students will package an egg to survive a long drop.

b. The instructor will construct a package design contest for students in cooperation with the art department.

c. Students will participate in a product engineering activity which may deal with a current issue from the newspaper.

2. a. Students will chart the flow of the product from production to the consumer.

b. Students will plan a scheme for distribution and sales using resources such as homeroom reps, student store, PTA, PA system, and bulletin boards.

c. Students will be rewarded with a sales commission to help sell the class product.

3. a. Students will recycle a glass bottle into a useful product, such as a vase or mug.

b. Students will reclaim and recycle plastic materials by regrinding.

c. Students will reclaim aluminum cans for casting.

4. a. Students will discuss modular electronic components and the changing roles of service personnel.

b. Students will visit a servicing facility for household items and interview service personnel to determine the changes that may have taken place in the last decade.

c. Students will participate in a scheduled maintenance program.

d. Students will read directions for the assembly and maintenance of some piece of equipment.

e. Students will design a maintenance manual for their class product.

IV.B. 1. a. The instructor will prepare several "What would happen if" questions for discussion.

b. Students will identify environmental hazards found in the home and catalog all the products used in the home and screen for hazards.

c. The class will discuss the environmental impacts that local industry is having on the community.

2. a. Students will calculate profit/loss, break even point, and profit margin.

b. The instructor will read a discussion on the part manufacturing plays in the growth or decline of the economy.

c. Students may discuss the possible effects of a plant shutdown on the local economy.

d. Students may discuss the possible effects that new or expanded manufacturing is having on the local economy.

3. a. Students will interview their parents to determine what labor-saving devices they have now that they did not have in their childhood.

b. Students will make a list (for homework) of the things in their life, and in the society in general, that are not mass manufactured.

c. The class will discuss how manufacturing has changed society over the last one hundred years.

d. The instructor will display a collection showing old Sears catalogs, magazine ads, and other historical clues to the way in which our society has changed due to manufacturing technology.

4. a. The instructor will lead a discussion on how manufacturing impacts the lives of individuals in the community, including income, life-style, living conditions and environment.

b. Students will prepare a research report that deals with the effects of the rapid changes brought about by high technology, concentrating on possible retraining requirements and individual salary growth potential.

PERFORMANCE OBJECTIVES/SUPPORTING COMPETENCIES

V. Control of Manufacturing
Suggested Instructional Time: 6 hours

A. The student will identify the reasons for continually controlling the resources used in manufacturing.

In order to do this, the student must be able to:

1. Describe the need for a quality assurance program for a manufacturing enterprise.

2. Explain the relationship between quality assurance and increased profitability in a manufacturing enterprise.

B. The student will identify the methods used to control a manufacturing system.

In order to do this, the student must be able to:

1. Develop monitoring techniques for the manufacturing enterprise.

2. Use comparison methods to identify inferior products.

3. Adjust the manufacturing system to compensate for problems that are causing inferior products, inefficiency, and waste.

SUGGESTED INSTRUCTIONAL STRATEGIES

V. A. 1. a. The student will experience the role of quality-control inspector by comparing produced parts with various inspection gauges.

b. Students will gather evidence that quality control measures were practiced during the production of consumer products purchased for the household (i.e., inspector labels found packaged with clothing items).

c. Classes will compete to produce the best product. Incentives and awards may be provided.

d. Students will compare the quality and cost of real products (tools, appliances, cars, etc.)

2. a. The instructor will discuss how profit and loss are affected by the quality of the production.

b. Students will keep all the waste stock used during manufacturing and estimate its cost. The instructor will discuss how this effects profitability.

V. B. 1. a. Students will develop appropriate monitoring techniques in the production of their product.

b. Students will list methods of monitoring specific processes or products (i.e., temperature, moisture content, quantity, volume, length, width, height, etc.).

2. a. The students should build or use a simple comparison device or tool (go/no go gauge, etc.) for some aspect of their manufacturing run.

b. Students will constantly compare the product being manufactured to the original specifications.

3. a. One student will keep a list of all the adjustments that had to be made during the manufacturing run, and report them to the class. This person could be the quality control officer.

V. B. 3. b. The instructor will give the students simple products with problems, and have them adjust resources to make the project better (poor paint job, casting with cavities, wood project falling apart, etc.).

COURSE: MANUFACTURING SYSTEMS

RESOURCES

PRINT

Alting, Leo. 1982. Manufacturing Engineering Processes. New York: M. Dekker.

Bame, E. Allen & Cummings, Paul. 1987. Exploring Technology 2nd Edition. Worcester, MA: Davis Publications, Inc. [Teacher's Guide and Activity Manual also available]

Bolz, R.W. 1982. Production Processes: The Productivity Handbook 5th Edition. NY: Industrial PR, Inc.

De Garmo, E. Paul. 1988. Materials and Processes in Manufacturing 7th Edition. NY: Macmillan Publishing Co.

Dictionary of Occupational Titles 4th Edition. Washington, D.C.: U.S. Government Printing Office, 1984.

Fales, J., A. Mervich, E. Sheets, and I. Dinan. 1986. Manufacturing: A Basic Text. Bloomington, IL: Glencoe Publishing.

Fine Woodworking Magazine. Newtown, CT: The Tarnton Press, 52 Church Hill Road, Box 355 06470

Groover, Mikell P. 1980. Automation, Production Systems, and Computer-aided Manufacturing. Englewood Cliffs, NJ: Prentice-Hall, Inc.

Link, A. 1981. Research and Development Activity in U.S. Manufacturing. NY: Praeger.

Manufacturing Forum. Menomonie, WI: University of Wisconsin-Stout, Published three times per year since 1976. $5.00 per year.

McCarthy, W.J. & E. Repp. 1984. Machine Tool Technology. Bloomington, IL: Glencoe, Bennett, McKnight. [Study Guide I and II and Instructor's Guide also available]

Occupational Outlook Handbook 17th Edition. Washington, D.C.: U.S. Government Printing Office, 1987.

COURSE: MANUFACTURING SYSTEMS

Roberts, S.K. 1982. Industrial Design with Microcomputers. Englewood Cliffs, NJ: Prentice-Hall, Inc.

Van Vlack, L.H. 1982. Materials for Engineering. Reading, PA: Addison-Wesley Publishers.

Wanger, W.H. 1981. Modern Industry: Structure - Materials Process - Products and Careers. Dubuque, IA: Kendall/Hunt Publishing Co.

Woodsmith Magazine. Des Moines, IA: Woodsmith, 2200 Grand Avenue 50312.

Woodworkers' Journal Magazine. New Milford, CT: The Woodworkers' Journal, P.O. Box 1624 06776.

Wright, R.T. 1985. Exploring Manufacturing. South Holland, IL: Goodheart-Wilcox, Inc. [Instructor's Guide and Student Manual also available]

Wright, R.T. 1987. Processes of Manufacturing. South Holland, IL: Goodheart-Wilcox, Inc.

Wright, R.T. & R.M. Henak. 1985. Exploring Production. South Holland, IL: Goodheart-Wilcox, Inc.

Wright, R.T. & T.R. Jenson. 1990. Manufacturing: Systems. South Holland, IL: Goodheart-Wilcox, Co., Inc. [Lab Manual and Instructor's Guide also available]

Wright, R.T. 1986. Manufacturing Laboratory Manual. South Holland, IL: Goodheart-Wilcox, Inc.

Yankee, H.W. 1979. Manufacturing Processes. Englewood Cliffs, NJ: Prentice-Hall, Inc.

COURSE: MANUFACTURING SYSTEMS

FILMSTRIPS

"Product Design"
"Obtaining Managerial Approval"
"Tooling Design"
"Quality Control"
"What's in a Name"
"Developing a Marketing System"
"Packaging"
* "Developing Production Methods"
* "Manufacturing: An Integral Part of Society"

Available from:
Manufacturing Forum
418 Harvey Hall
University of Wisconsin-Stout
Menomonie, WI 54751

"What is Manufacturing"
"The Materials of Manufacturing"
"The Tools and Processes of Manufacturing"
"Forming Processes in Manufacturing"
"Separating Processes in Manufacturing"
"The Combining Processes in Manufacturing"
"Research and Development in Manufacturing"
"Types of Production in Manufacturing"
"The Final Manufactured Product"
"Energy Sources for Manufacturing"

Available from:
McKnight Publishing Company
Bloomington, IL 61701
(309) 663-1341

COURSE: MANUFACTURING SYSTEMS

TRANSPARENCIES

"Introduction to Manufacturing and Management"
"Research and Development"
"Production"
"Marketing"
"Industrial Relations"
"Financial Affairs"
"Labor Unions"

Available from:
Manufacturing Forum
418 Harvey Hall
University of Wisconsin-Stout
Menomonie, WI 54751

A complete set of 30 transparencies on manufacturing processes is available from:

DCA Educational Products, Inc.
424 Valley Road
Warrington, PA 18976

A complete set of 38 Transparencies on manufacturing materials is available from:

DCA Educational Products, Inc.
424 Valley Road
Warrington, PA 18976

FILMSTRIPS AND TRANSPARENCIES

"Manufacture; People, Processes, & Products"

Available from:
New Concepts Corporation, Rochester
80 Commerce Drive
Rochester, NY 14623 $195.00

APPENDIX

COURSE: MANUFACTURING SYSTEMS

ACTIVITY BRIEF

Title: **Sun Dial**

Name:_____ Class:_____

Activity Brief Number: _____

Evaluation Date:	_____
Safe Practices (15%)	_____
Product (50%)	_____
Summary (20%)	_____
Maintenance (15%)	_____
Total (100%)	_____

OVERVIEW

By completing this lab you will gain experience with two common forming methods: casting and vacuum forming. You will make the body of the sun dial by casting a high density plaster into a mold that you will make by vacuum forming.

Vacuum forming machines operate by heating a thin sheet of plastic until it becomes very "plastic" or pliable. Once the plastic has been heated it is drawn down over a mold by a vacuum and allowed to cool. Once cooled, the plastic sheet will retain its new shape. The materials that we cast into the mold will become a liquid by the introduction of water. The water will start a chemical reaction within the plaster that will turn the plaster into a solid. Once the plaster has cured sufficiently it will be removed from the vacuum formed mold. While the plaster is curing, notice that it gives off quite a bit of heat, this is a result of the chemical reaction that is causing it to cure.

EQUIPMENT/MATERIALS

1. Plastic sheet - hi-impact polystyrene
2. _____oz. of casting plaster
3. Sun dial pattern
4. Mixing bowl
5. Measuring cup
6. Paint

PROCEDURE

1. Place the master sun dial pattern in the center of the vacuum forming machine table.
2. Lock the plastic sheet into position.
3. Heat the plastic sheet and draw it down over the master pattern.
4. Allow the plastic sheet to cool.
5. Set the mold into a wooden box making sure that it is level and well supported.
6. Measure out _____ ounces of casting plaster.
7. Measure out _____ ounces of water.
8. Add the water to the plaster mix and mix thoroughly. When it begins to "stiffen", pour the mixture into the mold. Scribe your name and class number into the smooth surface.
9. Allow the mixture to cure overnight.
10. When the plaster has sufficiently cured, it may be removed from the mold and its edges sanded smooth.
11. Allow the casting to thoroughly dry before painting the sun dial.
12. Thoroughly clean up the work area and replace all of the tools.

SUMMARY QUESTIONS

1. What causes the increase in the surface area of the piece of plastic that has been vacuum formed?
2. Where does the increase in the surface area come from? How is the thickness of the plastic material affected?
3. Can any other material be stretched into a new shape? Give an example and name a product.
4. What effect does overheating or underheating have on a vacuum formed product?
5. What causes the plaster to turn into a solid within the mold?
6. Why does the plaster take the shape of the mold?
7. Can materials other than plaster be cast into a new shape? Give examples.
8. Molds may be made out of a variety of materials, what determines the material that will be used to make a mold?
9. Is the mold that you made expendable or permanent?
10. What material is used to make molds for molten metals?

REFERENCES

Wright & Henak, Goodheart-Wilcox Co. Exploring Production.
Chapter 9 and 10, page 69 to 86.

COURSE: MANUFACTURING SYSTEMS

ACTIVITY BRIEF

Title: **Casting the Sun Dial Pedestal**

Name: _____ Class:_____

Activity Brief Number: _____

Evaluation Date:	_____
Safe Practices (15%)	_____
Product (50%)	_____
Summary (20%)	_____
Maintenance (15%)	_____
Total (100%)	_____

OVERVIEW

Engineering materials are used to produce the products of industry and are grouped into four basic materials. These are:

1. Metals
2. Polymers (plastic)
3. Ceramics
4. Composites - a combination of materials

The material that will be used for the base of the sun dial is a composite. One of the most important construction materials is a composite called concrete. It falls into this category because it is made up of two materials bonded together by adhesion. The Filler is sand and gravel and it provides the bulk of the concrete. The sand and gravel is held together by the Matrix, which is Portland Cement. Portland Cement is limestone chemically altered by heating then crushed to a fine powder. When mixed with water, the Portland Cement becomes a bonding agent and re-forms to become a rocklike structure.

EQUIPMENT/MATERIALS

1. Wooden form for the concrete base
2. Reinforcing mesh
3. Concrete mix
4. Form oil
5. Concrete mixing box
6. Hoe and trowel
7. Plastic film
8. Edging tool

PROCEDURE

1. Apply a light coat of form oil to the inside surface of the form.
2. Measure _____ of concrete mix and place it into the mixing box.
3. Measure _____ of coloring agent and mix it into the concrete mix.
4. Slowly add water to the mix. Mix thoroughly making sure to mix all of the dry concrete at the bottom of the mixing box. Be sure not to add too much water and create a sloppy mix.
5. Cut a piece of wire mesh to fit inside the concrete form. The mesh should be cut so that its edges will be 1/2" away from the sides.
6. Pour about one half of the mix into the concrete form. Now tap the form with a rubber mallet to eliminate the air bubbles from the mix.
7. Lay the mesh on the surface of the poured mix keeping the mesh away from the edges.
8. Pour the remaining concrete mix into the form. Tap the form occasionally to remove any air bubbles.
9. Use a length of 2 X 4 as a strike board and level off the concrete mix to the top edge of the form.
10. Scribe your name, class number, and date into the smooth concrete surface.
11. Cover the form with a piece of plastic film.
12. Allow the form to cure overnight.
13. Remove the concrete pedestal from the mold.

SUMMARY QUESTION

1. Into what group of engineering materials does concrete fall?
2. Name the four ingredients of concrete.
3. What ingredient(s) make up the filler?
4. What ingredient(s) make up the matrix?
5. Why is oil used on the form?
6. Briefly describe how Portland Cement is produced?
7. What is the difference between concrete and cement?
8. What function does the mesh perform?
9. What causes concrete to harden?
10. Name two other composite materials.
11. What force does concrete withstand the best?
    A. Tension
    B. Shear
    C. Compression
    D. Torsion

COURSE: MANUFACTURING SYSTEMS

REFERENCES

Wright & Henak, Goodheart-Wilcox. Exploring Production.
Chapter 3 page 21 to 29
Chapter 4 page 30 to 35
Chapter 43 page 348 to 361

COURSE: MANUFACTURING SYSTEMS

ACTIVITY BRIEF

Title: **Vacuum Formed Sign**

Name: _____ Class:_____

Activity Brief Number: _____

Evaluation Date:	_____
Safe Practices (15%)	_____
Product (50%)	_____
Summary (20%)	_____
Maintenance (15%)	_____
Total (100%)	_____

OVERVIEW

Vacuum forming is widely used to manufacture such items as packaging materials, refrigerator doors, boats, and signs. You will have an opportunity to make a sign of your choice.

A vacuum former first heats the plastic materials so that it may be stretched into a new shape without fracturing. A vacuum pump removes much of the air between the pattern and the sheet stock around the pattern. The pressure of the air in the room presses the heated plastic down over the pattern. The plastic is allowed to cool, assuming the shape of the pattern.

EQUIPMENT/MATERIALS

1. Plastic sheet stock - styrene
2. Letter or number sets
3. Composing board
4. Rubber cement

PROCEDURE

1. Layout all of the letters of the sign on the composing board.
2. Using rubber cement, glue the letters onto the composing board. Use a small amount of glue. Do not disturb the glued letters.
3. Lock the plastic sheets into the vacuum former.
4. Heat the plastic sheet until it begins to sag.
5. Lower the plastic into position and turn on the vacuum pump.
6. Allow the plastic to cool.
7. Trim the edge of the sign with scissors.
8. Roll paint onto the faces of the vacuum formed letters.
9. Return the letters to the case and clean up the work station.

COURSE: MANUFACTURING SYSTEMS

SUMMARY QUESTIONS

1. Why is the plastic preheated before the vacuum is applied?
2. What happens to the thickness of the plastic being formed?
3. Name three additional products that may be manufactured by vacuum forming.
4. What limits the depth or height of a product produced by vacuum forming?
5. What might happen if the plastic was overheated, or underheated?

REFERENCES

Wright & Henak, Goodheart-Wilcox & Co. Exploring Production.
Chapters 9 & 10, pages 69 to 86.

COURSE: MANUFACTURING SYSTEMS

ACTIVITY BRIEF

Title: **Polystyrene Expandable Beads**

Name: _____ Class:_____

Activity Brief Number: _____

Evaluation Date:	_____
Safe Practices (15%)	_____
Product (50%)	_____
Summary (20%)	_____
Maintenance (15%)	_____
Total (100%)	_____

OVERVIEW

Polystyrene beads have been used for many years in the manufacture of such items as coffee cups and ice chests, because of their excellent insulating properties. They are also used extensively for such items as floating pool toys because of their strength, light weight and buoyancy.

During this lab you will have the opportunity to mold styrene beads into a usable product.

Polystyrene expandable beads contain small amounts of gas in the core of the bead. When the beads are heated they soften allowing the gas bubbles to expand. The pellets will expand up to about 40 times their original size. The pellets are placed within a mold which confines their expansion, thus forming them into the shape of the mold and causing them to stick together by cohesion.

EQUIPMENT/MATERIALS

1. Mold of your choice
2. Measuring cup
3. Safety gloves and goggles
4. Heated immersion tank
5. Pre-expanded beads

COURSE: MANUFACTURING SYSTEMS

PROCEDURE

1. Make sure that the immersion tank is boiling.
2. Select a mold, coat the mold with a layer of paste wax.
3. Consult the chart for the necessary amount of pre-expanded beads.
4. Measure out the proper amount of beads.
5. Place the beads into the mold, make sure that edges of mold are clean.
6. Carefully close the mold.
7. Consult the chart for the proper immersion time.
8. Place the mold into the immersion tank for required amount of time. (If water drains from a mold that you have removed from the water, the beads have not fully expanded, return to the tank for an additional 5 minutes.)
9. Remove the mold from the tank, allow it to cool.
10. While the mold is cooling, thoroughly clean the work area.
11. Remove the product from the mold.

SUMMARY QUESTIONS

1. hat might happen to your product if you failed to wax the mold prior to forming the beads?
2. What would happen to the product if you did not add enough beads? Too many?
3. What causes the beads to stick together within the mold? (Use the correct terms.)
4. What causes the beads to fill the mold?
5. What processes of material shaping are demonstrated by this activity?
6. Specifically, what type of material is used for this product?

REFERENCES

Wright and Henak, Goodheart-Wilcox Co. Exploring Production.
Chapter 10

COURSE: MANUFACTURING SYSTEMS

ACTIVITY BRIEF

Title: **Locker Mirror**

Name: _____ Class:_____

Activity Brief Number: _____

Evaluation Date: _____
Safe Practices (15%) _____
Product (50%) _____
Summary (20%) _____
Maintenance (15%) _____
Total (100%) _____

OVERVIEW

The completion of the locker mirror will give you experience in several production processes: The glass for your mirror will employ a "non-traditional" separating process; controlled fracture, usually called glass cutting. The glass will have material removed to cause a design, by acid etching. You will produce the frame by butting wooden frames stock with a miter saw, this process is a chip removing process. You will coat the frame parts with a protective oil finish and you will assemble the parts by using adhesion, and mechanical fasteners.

An efficient way of manufacturing this product is by setting up a manufacturing line employing four people.

EQUIPMENT/MATERIALS

1. Miter box saw or power mite saw
2. Clamping fixture
3. Glass cutter, and cutting jig
4. Staple gun, 1/4 inch staples
5. Silk screen frame
6. Wooden frame stock - 1/2" X 3/4" X 30"
7. Mirror square 1/8" X 12" X 12" (one square for 4 mirrors)
8. Wood glue
9. Etching cream
10. 3/4" masking tape
11. String
12. Double sided tape
13. 120 grit, abrasive paper
14. Oil finish

COURSE: MANUFACTURING SYSTEMS

PROCEDURE

Wood Frame

1. Obtain a 30" length of pre cut frame stock from the instructor.
2. Sand the surfaces with the 120 grit abrasive paper.
3. Coat the entire piece of frame stock with an oil finish.
4. Use the miter saw, with a stop block, to cut 4 pieces of frame stock that measure 6 3/4" with a 45 degree miter at each end. The groove for the glass mirror must be on the short, or inside, edge.

Etching the Mirror

1. Obtain a 12 X 12 mirror square from your instructor, one mirror square will produce four finished locker mirrors.
2. Clean the mirror square with glass cleaner, keep finger prints off of the glass surface.
3. Place the mirror square into the silk screen printing frame.
4. Put on rubber gloves.
5. Apply a small amount of etching cream near the designs in the center of the silk screen.
6. Draw the etching cream over the designs with a squeegee.
7. Open the silk screen frame, carefully remove the mirror square, let stand for 5 minutes.
8. Use warm water and a sponge to clean the silk screen.
9. Rinse the mirror square with warm water, dry with a paper towel.

Cutting the Mirror

1. Place the mirror into the cutting jig.
2. Score the mirror down its center, fracture the mirror into halves over a straight square edge.
3. Cut the two halves in a similar fashion, to produce four 6" X 6" mirrors.

COURSE: MANUFACTURING SYSTEMS

Assembly

1. Tape an "X" on the back side of your mirror from corner to corner. This is to keep the glass pieces together, should the mirror be broken.
2. Write your name and period number on the tape.
3. Apply glue to the ends of each frame piece.
4. Slide the frame parts over each edge of the glass.
5. Place the frame into the clamping fixture, (or secure with a large rubber band)
6. Place a staple into each corner on the back side of the mirror. (Keep the staple near the outside corner so that the staple can not hit and crack the glass.)
7. Staple a 7" piece of string across the back side of the frame.
8. Apply one inch pieces of double sided tape to the top and bottom edged of the frame. (The tape and string give the consumer a choice of hanging methods.)
9. Remove the assembly from the fixture, allow it to dry overnight.

SUMMARY QUESTIONS

1. What adhesion assembly process was used to produce this product?
2. What manufacturing process was used to cut the frame members?
3. What manufacturing process was used to cut the glass?
4. What mechanical fastening method was used to produce this product?
5. List three additional types of mechanical fastening methods.
6. Speed, accuracy and safety are accomplished by using _____ for cutting and assembling.
7. What happened to the surface of the glass to cause the design?

REFERENCES

Wright and Henak, Goodheart-Wilcox and Co. Exploring Production.
Chapters 11, 13, and 21.

COURSE: MANUFACTURING SYSTEMS

ACTIVITY BRIEF

Title: **Tote Tray**

Name: _____ Class:_____

Activity Brief Number: _____

Evaluation Date: _____
Safe Practices (15%) _____
Product (50%) _____
Summary (20%) _____
Maintenance (15%) _____
Total (100%) _____

OVERVIEW

Many of the products that we use today were formed by stretching (bending) sheet metal into a three dimensional shape. Fabricated parts are often assembled by welding or mechanically fastening them together to form complete products. Some typical products include: cars, stoves, refrigerators, and tool boxes.

EQUIPMENT/MATERIALS

1. 26 gauge galvanized sheet steel or tin plate.
2. Wooden handle stock
3. Squaring shear
4. Bar folder
5. Box and pan brake
6. Spot welder
7. Punch and die set
8. Two #8 X 3/4" round head wood screws
9. Scriber
10. Tin snips or aviation snips

Optional

1. Vacuum former
2. Plastic styrene sheet stock
3. Router

PROCEDURE

Note: Sheet metal edges are very sharp, use caution when shearing, forming, and handling the sheet material.

1. Obtain one piece of 26 gauge sheet steel or tin plate 12" X 24" from the instructor.
2. Carefully center the pattern onto the sheet steel and mark the bending points through the pattern using a prick punch.
3. Punch the screw holes for the handle and the four corners of the box bottom.
4. Scribe the outside pattern of the box using a scriber.
5. Using the squaring shears, cut the outside pattern lines.
6. Using tin snips, cut the remainder of the outside shape.
7. Bend all hems marked "A" on the bar folder.
8. Bend all hems marked "B" on the bending brake.
9. Bend all folds marked "C" on the box and pan brake.
10. Spot weld the seams. **Caution** The spot welder develops very high temperatures. Wear gloves and safety goggles when welding.
11. Carefully remove any sharp edges or burrs with a fine mill file.
12. Cut a piece of handle stock, 3/4" X 1" to a length of 14". Drill two 1/8" pilot holes into the handle. Use the holes in the box side for the layout.
13. Attach the handle with two number 8 X 3/4" round head wood screws.

<u>Optional</u>

1. You may if you wish vacuum form an insert to the tote tray.
2. You may route the edges of the handle using the router and a 3/4" rounding over bit.
3. You may pop rivet one end of the box.

COURSE: MANUFACTURING SYSTEMS

SUMMARY QUESTIONS

1. How is the sheet metal used for this product coated? How does this coating protect the metal?
2. What device was used to layout the sheet metal? How did this device help to insure the accuracy of the product and help get the job done more quickly?
3. What happens to the sheet metal to allow it to retain its new shape?
4. What separating process is used to cut the sheet metal?
5. What type of combining process is represented by spot welding? By pop riveting?

6. What separating process is used to form the holes for the wood screws in the sheet metal?
7. What combining process is represented by the use of the wood screws?
8. Name two functions that the tabs perform on the sheet metal edges.

REFERENCES

Wright & Henak, Goodheart-Wilcox & Co. Exploring Production.
Chapters 10, 11, and 13.

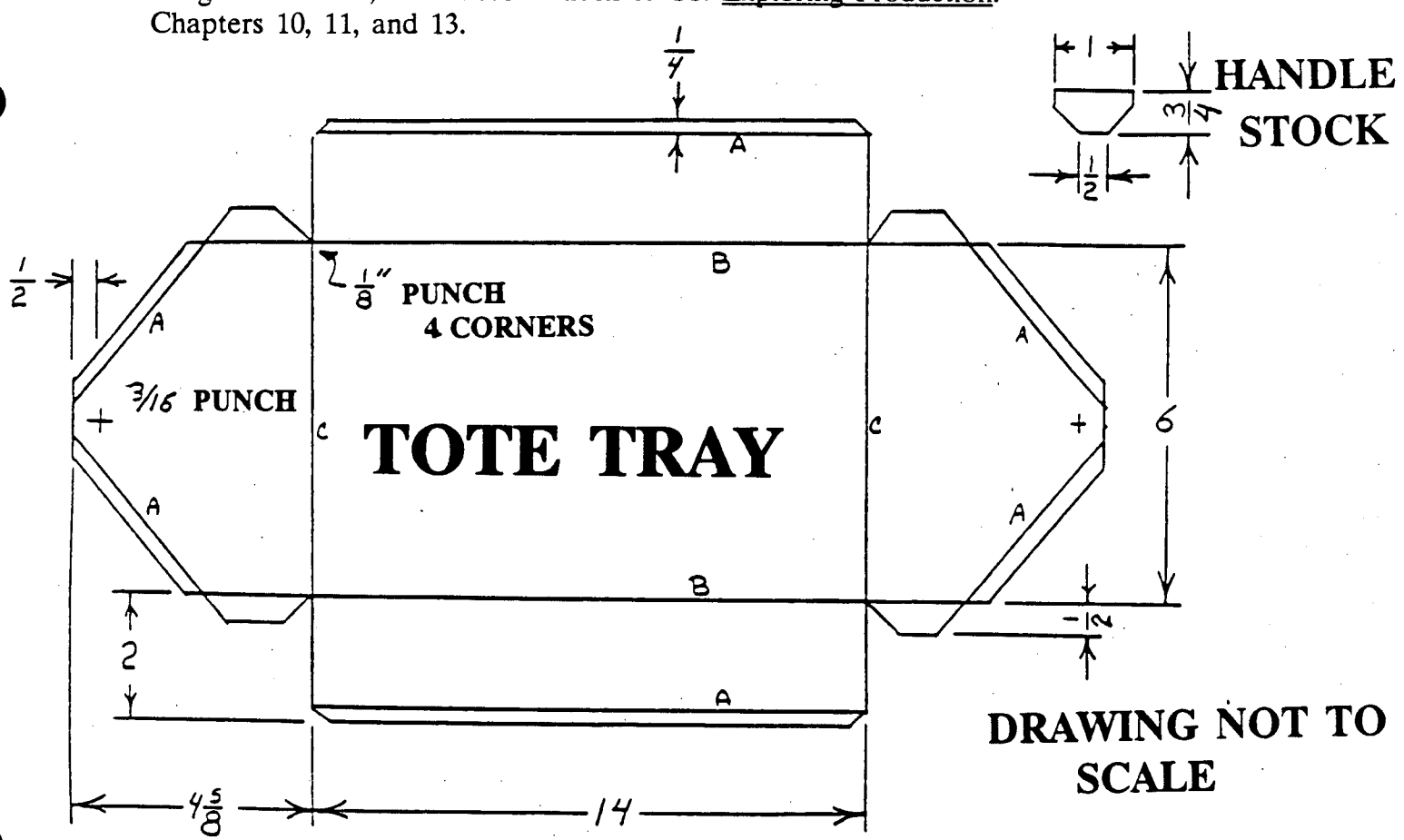

COURSE: MANUFACTURING SYSTEMS

ACTIVITY BRIEF

Title: **Shaping a Screwdriver Blade**

Name: _____ Class:_____

Activity Brief Number: _____

Evaluation Date:	_____
Safe Practices (15%)	_____
Product (50%)	_____
Summary (20%)	_____
Maintenance (15%)	_____
Total (100%)	_____

OVERVIEW

One of the most important forming processes is forging. Metalsmiths and blacksmiths worked with metal to make all types of products useful to people of their society.

Although some materials, such as clay are sufficiently plastic to allow them to be cold shaped, steel needs to be heated to about 1100 degrees in order to make it plastic. Once steel is in its plastic state, it can be forced into a closed die, rolled, or formed between a hammer and anvil called an open die.

The forging process will be used to form a screwdriver blade. The forged blade will then be ground into a finished screwdriver shape.

EQUIPMENT/MATERIALS

1. Safety gloves and goggles
2. Forging furnace (or torch)
3. Tongs and hammer
4. Anvil (or drop forge)
5. Quenching pail with water or brine
6. Grinder
7. Sample shapes for the forging and grinding operations
8. 1/4" drill rod 6" long having a 0.6% carbon content

PROCEDURE

1. Be sure that the forging furnace is at the proper temperature.
2. Cut the blade stock to a 6" length with a hack saw.
3. Heat the stock to the proper forging temperature. Check the chart. Be sure to wear safety goggles and gloves.
4. While holding the stock with the tongs, hammer the opposite sides flat, while continually turning the stock.
5. Reheat the stock if it cools below the plastic state.
6. Slightly flatten the stock on the handle end.
7. Compare the blade shape to the example chart.
8. When satisfied, cool the blade in the quenching pail of water or brine.
9. Using the grinder, grind the flat surfaces, angle edges, and square the end.
10. Turn off the furnace.
11. Return all tools to the proper area and clean up the work station.

SUMMARY QUESTIONS

1. What classification of dies are used to form the screwdriver blade?
2. Why is it necessary to heat the metal before beginning the forging process?
3. Force is needed to forge metal into its final shape.
   a. What supplies the force when forming the screwdriver blade?
   b. Name three machine tools that can supply a force in order to forge metal.
4. What is the advantage of a forged blade over other processes?
5. What general process of material shaping is demonstrated by grinding? And by forging?
6. What energy source is used to heat the forging furnace?

REFERENCES

Wright & Henak, Goodheart-Wilcox & Co. Exploring Production.
Chapter 10 and 11, pages 77 to 100.

COURSE: MANUFACTURING SYSTEMS

ACTIVITY BRIEF

Title: **Conditioning the Screwdriver Blade**

Name: _____ Class:_____

Activity Brief Number: _____

Evaluation Date:	_____
Safe Practices (15%)	_____
Product (50%)	_____
Summary (20%)	_____
Maintenance (15%)	_____
Total (100%)	_____

OVERVIEW

Although the blade of the screwdriver has been changed by forging, a forming process, and by grinding, a separating pro- cess, the blade still needs to be heat treated to improve its internal physical properties.

Think of what happens when someone in your family makes cookies. After the ingredients are mixed into a dough, it certainly does not taste like cookies. After baking them for a few minutes, the dough becomes crunchy and they taste very good. The heat of the oven changes the internal structure of the cookies.

When the same thing is done to an industrial material, it is called conditioning. Most often, conditioning is needed to change the physical or mechanical properties of the material. The methods of conditioning are thermal, mechanical, and chemical. Thermal (heating) conditioning will be used to heat-treat the screwdriver blade. Its mechanical properties will be improved by hardening without changing its physical appearance. Tempering is a drawing process which will relieve the internal stress in the hardened steel, thus increasing its toughness. Properly tempered steel will not crack or fracture under heavy stress, vibration, or impact.

EQUIPMENT/MATERIALS

1. Safety goggles and gloves
2. Furnace (or torch)
3. Tongs
4. Quenching pail with water or brine
5. Completed screwdriver blade

COURSE: MANUFACTURING SYSTEMS

PROCEDURE

1. Be sure that the forging furnace is at the proper temperature.
2. Be sure to wear safety goggles and gloves.
3. Using the tongs, place the screwdriver blade into the furnace.
4. Checking the color of the blade regularly, allow it to reach 1450 degrees fahrenheit. This is a cherry red color.
5. After reaching the required temperature, quench the blade causing it to cool quickly.
6. Clean the screwdriver blade with emery cloth.
7. Re-heat the blade to a pale blue temperature.
8. Allow the blade to cool slowly in air to quench it in brine or water.
9. Finish the blade by polishing it with emery cloth until clean.
10. Return the tools to their proper racks and clean up the work station.

SUMMARY QUESTIONS

1. What industrial process is used when heat treating a material to change its physical properties?
2. Why is it necessary to heat treat the screwdriver blade?
3. What is the purpose of tempering an industrial material?
4. Give examples of other materials that must be conditioned.
5. Give a brief description of a common everyday conditioning process.

REFERENCES

Wright & Henak, Goodheart-Wilcox & Co. Exploring Production.
Chapter 12, pages 101 to 107.

COURSE: MANUFACTURING SYSTEMS

ACTIVITY BRIEF

Title: **Forming the Screwdriver Handle**

Name: _____ Class:_____

Activity Brief Number: _____

Evaluation Date: _____
Safe Practices (15%) _____
Product (50%) _____
Summary (20%) _____
Maintenance (15%) _____
Total (100%) _____

OVERVIEW

Many products such as pens, car parts, toys and combs are produced by a process call injection molding. A thermoplastic is first heated by the injection molder to cause it to become more "plastic". The injection molder forces the plastic material into a mold under great pressure. When the plastic cools it can be removed from the mold. Excess material can be ground up and recycled to make more plastic products. Injection molding falls into the "forming" family of processes.

EQUIPMENT/MATERIALS

1. Safety gloves, and goggles
2. Injection molder
3. Screwdriver mold
4. Styrene pellets
5. Screwdriver blade (produced during forging, and conditioning activity)

PROCEDURE

1. Turn on the injection molder.
2. Fill the heating chamber with polystyrene pellets.
3. Allow the heating chamber to come up to _____ degrees.
4. Place the shank of your screwdriver blade into the mold cavity.
5. Securely clamp the mold in place.
6. Attach the air line. The air pressure should be adjusted to 90 PSI.
7. Activate the air ram, hold in place for 15 seconds. (This will help prevent shrinkage of the plastic as it cools.)
8. Allow the mold to cool for five minutes.
9. Detach the air supply line for the injection molder.
10. Remove the mold from the machine, remove the screw driver from the mold.
11. Trim off the sprue and any excess flash.
12. Turn off the injection molder, return the mold, clean up the work station.

COURSE: MANUFACTURING SYSTEMS

SUMMARY QUESTIONS

1. What industrial process is employed to produce the screwdriver handle?
2. Why must you use a thermo plastic rather than a thermoset when injection molding?
3. What other materials might be formed by similar processes?
4. Can the sprue and flash from your handle be used again?
5. Where does the energy come from to force the heated plastic into the mold?
6. List 10 products made by this or similar forming processes.

REFERENCES

Wright & Henak, Goodheart-Wilcox and Co. Exploring Production.