TECHNOLOGY EDUCATION
PRINCIPLES OF ENGINEERING

ENERGY CASE STUDIES

RECEIVED
JAN 27 2010
Career and Technical Education Team

New York Power Authority

Developed with funding from the New York Power Authority

The University of the State of New York
The State Education Department
Bureau of Home Economics
and Technology Education Programs
Division of Occupational Education
Albany, New York 12234

Principles of Engineering

Energy Case Studies

	Page
Introduction	1
Robert A. Jones Dr. Joseph Piel	
Buiding a Model Low Energy Requirement House	11
Donald Pemberton Dr. John Roeder	
Building a Model Solar-Electric Car	53
Glen Botto Dr. Eric Thacher	

INTRODUCTION

I. CASE STUDY DESCRIPTION

Energy is at the heart of all that we do. Our own personal energy enables us to move, speak, and breathe. Entire bookshelves of written materials and whole courses and even careers are devoted to the study of energy.

This six-to-eight-week case study will of necessity deal with a very small segment (two aspects) of the energy field. Following a brief study of energy sources and transformations, students will concentrate on one of the two aspects of energy covered in this case study. They will use engineering design either to develop a model low energy requirement house or to build a model solar-electric car. In either case, the concepts of the Principles of Engineering syllabus — Modeling, Systems, Optimization, Technology Society Interactions, Design, and Ethics — will form the basis of the activity.

II. ENERGY: A BRIEF BACKGROUND

Energy is generally taken for granted. Most of us think that it will always be there on demand. Yet its availability is dependent on many factors. Future supplies of all our natural resources, including energy, are dependent on the wise selection of the best energy mix for any specific purpose. The basis for determining the best mix is an appropriate combination of education (behavior modification), legislation (rules and regulations), and technology (research and development of viable systems).

Most energy today is generated by conversion of oil, coal, and natural gas, which are considered fossil resources and non-renewable. Conversion processes vary among resources. Each process of converting from source to form of energy has positive and negative consequences.

The big problem today is that fossil fuel sources are being blamed for smog, acid rain, and global warming. It is also becoming very clear that fossil fuels are a limited resource and careful decisions need to be made in the use of these non-renewable resources.

Energy is also obtained from nuclear power, water power, wind power, solar power, and other sources. As with fossil fuel conversions, nuclear and alternative energies also have positive and negative attributes.

Energy choices should reflect the most efficient and effective conversion, using education, legislation, and technology in addressing economic, political, and environmental issues.

So what is the best energy mix? Who will make future decisions on energy choices? How can selections be made to provide energy to maintain current levels, keep costs reasonable, and not harm the environment?

There is no such thing as a "free lunch." No energy system is free of problems. The concept of optimization comes into play, and trade-offs relative to each energy system must be considered.

- The use of nuclear energy poses no problems in regard to smog, acid rain, or global warming, but there are problems involved in the disposal of used fuel rods from nuclear power plants. Because fissioning of uranium fuel in these rods produces highly radioactive products, the rods must be disposed of at specially isolated sites so their radioactivity will not contaminate the environment.

- Falling water provides the mechanical energy to turn electric generators, and when the water supply is adequate, the electricity generation capacity is optimum. If we wish to insure an adequate water supply for the generators, we build dams. These dams are often accused of affecting the ecology of the region.

- Heat from below the Earth's surface (geo-thermal) can provide the energy to heat buildings or boil water to provide steam for turbines to generate electricity. Often, environmentally damaging material associated with the steam comes out of the ground in the process.

- The process of manufacturing photovoltaic solar cells produces toxic waste which is difficult to recycle or dispose of.

- Wind generators are useful only in regions where there is a strong enough wind for a reasonable time each day to turn the turbines which turn the generators to produce electrical energy.

- Many of the present generating plants are designed to use fossil fuels. Any change from fossil fuels requires expensive replacement. The job of the energy producers and the energy consumers is to agree on the optimum mix of energy systems.

An example of such a mix was a project in Oklahoma in the 1970s which linked wind generators with solar panels to take advantage of a local situation in which cloudy days were often very windy. Another example is heat pumps for houses which use the fact that the soil below the house is warmer than the outside temperature in the winter and cooler in the summer.

III. DEFINITION OF THE PROBLEM

In this case study of energy conversion and use, students will research various ways in which energy is transformed from one form to another, gain insights into energy options that exist today, and explore ways to help meet future energy demands. Students will design and construct either a model energy efficient house or a model solar-electric car to demonstrate the conversion and efficient use of energy. These activities will provide hands-on experiences related to conversion processes for home and transportation. Regulations are included (see Appendix A) relative to safety and environmental considerations in the production of energy.*

IV. INTRODUCTORY ACTIVITY

The purpose of this generator activity is to demonstrate physically that there is no such thing as a "free lunch." We will use mechanical energy as the input to produce an output of electrical energy. This exercise can be done as a demonstration or as a class activity, depending on the amount of equipment available.

1. Connect a hand-operated electrical generator to a voltmeter and a single light bulb as in Figure 1.

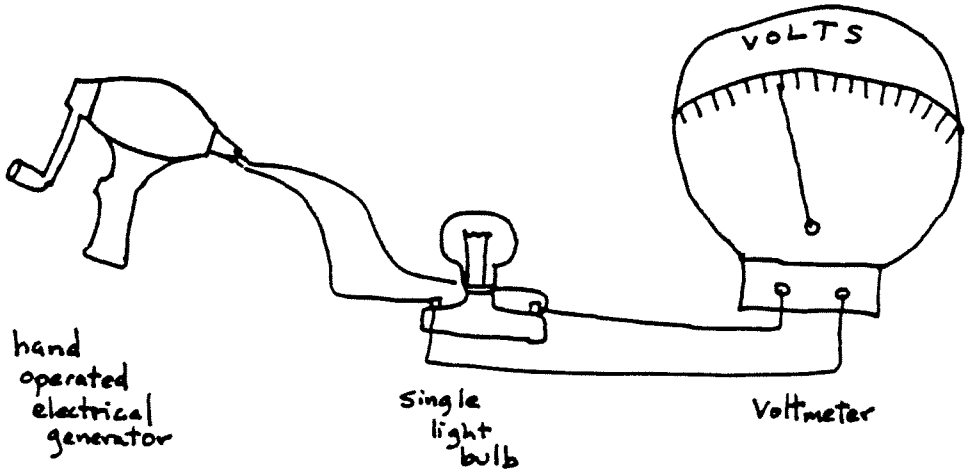

Figure 1. Measuring Volts with Change in Speed

---

*Before starting any of the activities in the matrix, students doing the house case study should start a home energy survey by recording on the chart in Appendix B the number of hours each appliance is used during the next week.

2. Note the voltage as you turn the handle at different speeds. The faster you turn the handle, the greater the voltage. For a given resistance (a light bulb) the greater the voltage, the greater the current going through the filament of the bulb, and the brighter the light.

3. Next connect more light bulbs in parallel with the original and note the difference in energy required to maintain the same voltage and therefore brilliance of the light bulbs.

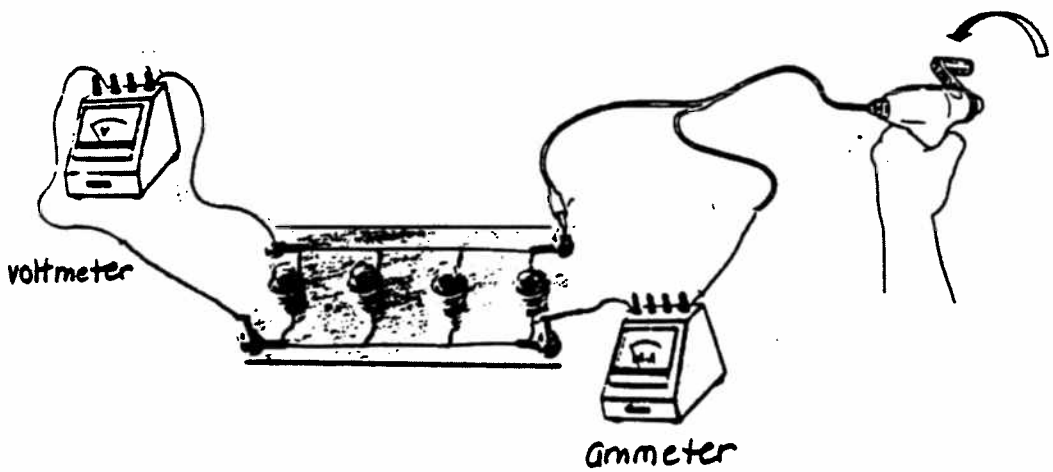

Figure 2. Measuring Power Requirements for Various Loads

4. Repeat the experiment with an ammeter connected in series with the bank of light bulbs as in Figure 2. Record both the voltage and the current readings for one, two, three, and four bulbs. Calculate the power in watts by multiplying the volts by the amperes. ($P = E \times I$ in which P is in watts, E is in volts, and I is in amperes.) One horsepower equals 746 watts. How much horsepower is required to keep these four light bulbs lit?

It is important that each student have the opportunity to experience the mechanical power drain on the system as more electrical power is required. This experience should be referred to as the students work through and design their various projects. It should bring home the concept of "peak power."

V. EXPLANATION OF SPECIFIC MATRIX

The matrix matches the six concepts, Modeling, Systems, Optimization, Science Technology, Design, and Ethics, against the two major topics of the introduction, Energy Background, and Generator Activities. In each of the 12 boxes of the matrix there is a suggested student action. Some require library research, some a class discussion, and some the construction of a graphical or flow-chart model of a situation, as well as actual laboratory experience with converting mechanical energy to electrical energy.

Introductory Matrix for Energy Case Studies

CONCEPTS	BACKGROUND	ACTIVITY
MODELING	From information in the library and the various publications listed in the references, construct a pie chart of the percent use of various sources of energy to produce electricity.	Graph the power vs. voltage in the second activity. Graph the current vs. voltage in the second activity.
SYSTEMS	Diagram the systems involved in the generation of electricity from a renewable and a non-renewable.	Construct a flow chart to describe the apparatus set-up for each activity. Specify input, output, feedback.
OPTIMIZATION	Explain the trade-offs involved in the generation of electricity from coal as compared to the generation of electricity from any other source.	As a result of experience in generating electricity to light four bulbs, explain the concept of peak power loads and make recommendations for maintaining low levels of peak power.
TECHNOLOGY-SOCIETY INTERACTION	Role-play ways in which engineers and legislators might work together to reduce the potential negative effects of electrical generation and distribution.	Discuss some of the educational and technological alternatives which electrical generation companies might institute to reduce the peak load at any specific time of day.
DESIGN	Use the design process to develop a procedure for examining the effects of various energy transforming systems on the environment.	Design a system which would compare the power in vs. the power out in an electrical generation system.
ETHICS	Discuss regulations as they relate to ethical problems involved in energy conversion.	In terms of peak power, discuss the ethics involved when citizens demand that industry reduce its push for more generating plants while continuing to use all of their electrical appliances at the same time each day.

VI. STATISTICAL DATA

Statistical data are available from a variety of sources. "The World Almanac," published by Newspaper Enterprises Association, is usually found in school libraries. Other sources are "State of the World," published by The Worldwatch Institute, and "The Universal Almanac," published by Andrews and McMeel. Table I is an example of data found in "The Universal Almanac 1992." It can be used to develop the model for any one year as suggested under Background in the matrix. It can also be used to show graphically the change over 39 years. These data can be supplemented by additional research.

Table I. U.S. Net Generation of Electricity by Utilities by Energy Source, 1950-89 (Billion Kilowatt-hours)

YEAR	COAL	NATURAL GAS	PETRO-LEUM	NUCLEAR POWER	HYDRO-ELECTRIC	GEOTHER-MAL and OTHER	TOTAL
1950	155	45	34	0	96	<0.5	329
1960	403	158	48	1	113	<0.5	756
1970	704	373	184	22	248	1	1,532
1980	1,162	346	246	251	276	6	2,286
1989	1,551	264	158	529	264	11	2,779

This is a good time to emphasize that power is expressed in kilowatts and horsepower while energy is expressed in kilowatt-hours and Btus.

VII. RESOURCES FOR STUDENTS AND TEACHERS

A. References

Abbate, F.J. Ethics and Energy. Washington, D.C.: Edison Electric Institute, 1979.

Edison Electric Institute. "Careers in Electric Power." Washington, D.C.

Energy Scholar Software Series. "Power Controller." New York Power Authority, 1986.

Gibbons, J.H., Blair, P.D., and Gwin, H.L. Managing Planet Earth — chapter on Strategies for Energy Use. New York: Scientific American, 1989.

References, continued

Kleinback, M.H. and Salvagin, C.E. Energy Technologies and Conversion Systems. New Jersey: Prentice-Hall Inc., 1986.

National Issues Forum. Energy Options: Finding a Solution to the Power Predicament. National Issues Forum Institute, 1991.

Smith, A.B. Exploring Energy: Sources/Applications/ Alternatives. Ill: Goodheart-Wilcox Co., 1985.

Shultz, R.D. and Smith, R.A. Introduction to Electric Power Engineering. New York: Harper & Row Publishers, 1985.

B. Equipment

hand-operated generator
voltmeter
ammeter
4 bulbs in sockets
wire

Appendix A

REGULATION

The level of regulation in the energy industry varies widely. The electric power industry, for example, is highly regulated. Because granting franchises to electric utilities as sole or primary providers of electric power in specific areas limits competition, regulations assure that a reliable supply of energy is provided at a reasonable price.

To engineers, regulations often become, in effect, an additional specification for the design, construction, operation, analysis, or modification of their systems. The type of regulation and the limitations that result can affect the engineer's work profoundly.

Regulation of energy can be categorized from several viewpoints. One way is to look at the functional aspects of the energy system covered by the requirements. Major categories are:

Environmental: Regulations address and limit how energy production, delivery, and use can affect the environment. Federal regulations, such as clean air and clean water acts, as well as state and local rules, affect all facets of the energy industry.

Economic: Regulation of how electric and gas utilities do business assures that the cost of energy supplied to consumers is reasonable. Rather than dealing with market forces, economic pressures in this part of the energy industry result largely from regulations. New regulations require competitive bidding and more consideration of different alternatives than in the past.

Reliability: Because of the critical importance of electricity in our society, electric utilities are required to design and operate the facilities that produce and supply electricity with enough backup capabilities to minimize the chance and length of interruptions of electrical power.

Safety: In addition to standard industrial safety, as applies to all industries, the electric industry and, in particular, the nuclear power industry have extensive safety regulations. The Nuclear Regulatory Commission and other agencies closely regulate how radioactive materials are handled and how nuclear power plants are operated. The very nature of energy and energy sources involves the potential for fires and other hazards, making extensive regulations necessary.

From another viewpoint, the parts of the electrical supply system are regulated in various ways.

Power Plants: Electricity is often produced at large, central station power plants. Regulations cover their design, construction, operation, maintenance, and even the eventual retirement of the facilities.

Delivery Systems: The transmission and distribution lines used to deliver electricity to users are regulated by state and federal rules as to their location, design, construction, operation, and reliability.

Use: The way energy is used is regulated in the form of standards for performance of appliances, buildings, or facilities requiring electricity. Recent regulations require electric utilities to consider "demand side management" -- ways to improve the efficiency of energy use to reduce the need to build new power plants.

While many engineers are involved with designs of energy systems, plants, or components to meet regulations, a large number of engineers are also involved with the analyses that assure that specifications are being met. Quality assurance and quality control are important parts of any industrial operation.

An example of a safety analysis used in nuclear power plants to evaluate whether safety specifications are met and to identify areas for improvement is "probablistic risk assessment." Engineers review the components that make up a power plant to determine the consequences of failure of virtually each switch, motor, pump, and pipe in the power plant. They also evaluate their chance or probability of failure. By looking at the possible results of a failure and other problems that could, in turn, lead to more possible problems, the engineers develop complex "fault trees." These fault trees identify sequences of events in which a small problem might lead to a major safety concern, as well as show the likelihood of that chain of events.

Engineers use this type of analysis to determine what changes might be necessary in plant operations or what modifications may have to be made to plant systems. The probabilities of these events help the engineers to establish priorities and determine the importance of each issue.

It is interesting to note that regulations may be developed without a scientific or technical basis, and therefore they can be confusing to the engineers who must implement them.

Appendix B

Preliminary Home Energy Survey of Number of Hours of Appliance Use

Appliance	Day 1	Day 2	Day 3	Day 4	Day 5	Day 6	Day 7	Total
Air cond. (sm)								
Air cond. (med)								
Air cond. (lg.)								
Blender								
Broiler								
Clock								
Coffee maker								
Dishwasher								
Dryer (elec.)								
Elec. skillet								
Hair dryer								
Iron								
Light bulb (60 w)								
Light bulb (75 w)								
Light bulb (100 w)								
Microwave oven								
Radio								
Range (elec.)								
Refrigerator								
Sewing machine								
Stereo								
TV (b/w)								
TV (color)								
Toaster								
Vacuum cleaner								
Washing machine								
Water htr. (elec.)								
Window fan								
Other								

BUILDING A MODEL LOW ENERGY REQUIREMENT HOUSE

I. CASE STUDY DESCRIPTION

In the Introduction to Energy Case Studies, the various problems associated with providing energy are presented. The suggestion is made that people look for the appropriate mix of energy sources and uses to choose the optimum plan for a specific situation. In this case study, the students are encouraged to look at the various aspects of energy use in the house. Two specific areas of study are (1) the use of appliances, especially lighting, and (2) house construction to reduce the amount of energy needed for heating in the winter and for cooling in the summer.

II. DEFINITION OF THE PROBLEM

Current growth in household energy use presents a problem for planners involved in energy production and distribution. Present use of household energy should be reduced. Improvement in house construction and more efficient use of appliances can eliminate energy waste. Accomplishing both of these will slow the depletion of energy resources now and in the future. It will also reduce the environmental problems associated with changing energy from one form to another.

III. PERFORMANCE OBJECTIVES

A. Students will learn how energy is used in the home.
   1. Students will measure the electrical energy involved in various lighting systems.
   2. Students will measure energy transfer through various materials.

B. Students will use study and evidence to select optimum lighting systems for homes.

C. Students will design an energy efficient house for a family of four with minimum energy use.

D. Students will build a model of the energy efficient house.
   1. The house will maintain an optimum living-space temperature under a variety of outside conditions.
   2. The house specifications will provide for adequate lighting at a reduction in the amount of electrical energy used.

IV. EXPLANATION OF THE SPECIFIC MATRIX

The matrix describes the various ways in which the case study incorporates the basic concepts of the Principles of Engineering syllabus: Modeling, Systems, Optimization, Technology-Society Interaction, Design, and Ethics.

Low Energy Requirement House Matrix

CONCEPTS	APPLIANCES ACTIVITIES	HOUSE CONSTRUCTION ACTIVITIES
MODELING	Chart the electrical energy used in student's home for one week.	Chart the heat energy used in student's home for a month.
SYSTEMS	Examine how all of the subsystems (appliances) affect the total electrical system in the house.	Examine heating and cooling as systems affecting the energy efficiency of the house.
OPTIMIZATION	Minimize electrical energy used without loss of light intensity.	Minimize energy use within economic and space requirements.
TECHNOLOGY-SOCIETY INTERACTION	Examine the long-term benefits for society of the reduction of electrical energy use in the home.	Debate: Are you willing to spend the additional money in the short term to conserve energy for the future?
DESIGN	Develop a system of efficient appliance use, considering time of day as well as the actual device.	Design effective use of shape and materials to produce an energy efficient house.
ETHICS	Debate: Is it ethical to be wasteful of energy in use of appliances even if you can afford it financially?	Project the impacts of wasteful energy consumption on future generations.

V. BACKGROUND MATERIAL

Background material is presented along with the instructions for each of the activities involved in the preliminary study of energy use and in the design and building of the model low energy requirement house.

VI. PROJECT OVERVIEW

There is a need to conserve energy from the standpoint of resources and to reduce environmental problems involved in the transfer and conversion of energy from the natural resources to useful energy in the home. Students will engage in class discussion, laboratory activities, and library research regarding these needs. Students will then design and build a model of a low energy requirement house.

VII. SUGGESTED EVALUATION METHODS

A. Paper and pencil tests of information involved in energy waste and energy efficiency.
B. Observation of use of appropriate laboratory procedures during investigations.
C. Observation of appropriate use of tools in designing and building the low energy requirement house.
D. Observation of ability and willingness to work in team activities.
E. Rating of actual design and final product.

VIII. CASE STUDY TIME TABLE

Please note that activities suggested for Days 8, 9, 12, 13, and 25-26 may take longer, depending on depth of study.

Day 1

- Have students report on the preliminary home energy survey taken during the introductory week (Appendix B in Introduction).
- Do Instruction Sheet 1 — Home Electric Energy Survey.
- List energy used (electrical, gas, oil, coal, wood, etc.) per month for previous year from utility bills.
- Have students identify which of the above energy uses are derived from non-renewable resources and which might reasonably be replaced by renewable sources.

Day 2

- Explain the residential structure energy usage concept that energy required and energy used are always equal (simplified: heat in=heat out).
- Have students calculate degree days using the chart in the Appendix C. Explain by example how thermal energy moves from a higher temperature level to a lower temperature level.
- Have students compare energy used per month in heating degree day months and cooling degree day months to other months to determine life cycle energy.

Case Study Time Table, continued

Days 3-4	• Do Instruction Sheet 2 — Lighting Specifications. • Discuss the principles of construction of passive solar homes (see Instruction Sheet 3).
Day 5	• Do Instruction Sheet 4 — Choosing Efficient Lighting for Your House using the Light Bulb Energy Efficiency Data chart from Instruction Sheet 2.
Day 6	• Do Instruction Sheet 5 — Special Lighting Features to Promote Energy Efficiency.
Day 7	• Do Instruction Sheet 6 — Insulating Your House.
Days 8-9	• Provide a sample (model, drawing) of a low energy requirement home with the roof, living area, and mass storage separate but interconnectible. • Calculate heat loss of the structure. • Determine the desired solar percentage of the structure. • Calculate the percentage of the south wall that should be glazed. • Explain mass storage, diurnal swing. • Explain energy absorption, specific heat, and release. • Using the sample model/drawing and the information from Instruction Sheet 2, assign small groups to design the lighting system for the sample home.
Day 10	• Invite an owner of a passive solar home to describe the features of the house or show a video on a passive solar home. • Have students do library research on such a home.
Day 11	• Discuss advantages and disadvantages of active, passive, and hybrid solar homes (see Instruction Sheet 7).
Day 12	• Have students assemble in groups related to the area of engineering they find interesting <u>and</u> consistent with the composite systems in a passive/hybrid house. • Do Instruction Sheet 8 — Designing a Passive/Hybrid House.

Case Study Time Table, continued

Day 13	• Assemble student groups with each type of engineering represented and have students brainstorm and sketch passive hybrid solar designs. • Identify the most positive aspects of student designs and have the group select the most appropriate ideas for siting, aesthetics, economics, livability, and efficient use of energy. • For the purpose of building the model, have students resketch their structures, selecting scale and adding dimensions appropriate for the model.
Days 14-24	• Students will work in their groups to construct a model home, keeping appropriate written records of their work. • Students should read, research, and when possible find "consultants" (teachers, parents, engineers, contractors, supplies) to obtain the information necessary to carry out their engineering roles. • Groups will construct the actual model structure with appropriate members working on computers, researching systems for monitoring, and gathering and processing data. The model should incorporate students' findings concerning the structure's living space, glazings, insulations, monitoring and data gathering equipment and controls, and mass storage. • The whole class should meet periodically to insure that all students understand the entire design, construction, and evaluation process.
Days 25-26	• Students gather data on energy gain, energy loss, time factors, temperatures, insulation information, etc. of their model structure. Students should then analyze the data, optimize, and repeat the analysis. • Use Instruction Sheet 9 — Analysis of Model House.
Days 27-29	• Each group will make a presentation to the class on how it used the six engineering concepts to arrive at its final design solution.
Day 30	• Each student will describe in writing his/her understanding of how the utilization of the engineering concepts contributed to the successful performance of the low energy requirement passive hybrid solar home.

IX. RESOURCES FOR STUDENTS AND TEACHERS

A. Instruction Sheets

1. Home Electric Energy Survey
2. Lighting Specifications
3. Principles of Construction of Passive Solar Homes
4. Choosing Efficient Lighting for Your House
5. Special Lighting Features to Promote Energy Efficiency
6. Insulating Your House
7. Comparison of Solar Home Types
8. Designing a Passive/Hybrid House
9. Analysis of Model House

B. References

C. Supplies and Equipment

D. Appendices

C. Degree Days

D. Insulation Testing

E. A Passive Solar House

INSTRUCTION SHEET 1

HOME ELECTRIC ENERGY SURVEY

Background

On the first day of study of the Introduction, each student will survey his/her own family's use of electric energy for a week. The survey should begin the day the unit starts so that it can be discussed at the end of the one-week Introduction. The purpose of this survey is for students to become aware of how much electric energy is used in the home and how it is used. This can serve as a benchmark against which the energy use of the planned house can be compared.

In the Home Electric Energy Survey, two appliances will be in use all the time: electric clocks and refrigerators. Because the refrigeration equipment is not always operating, though, less energy will actually be used than if the refrigerator is considered to be operating all the time. The fraction of time that the refrigerator does operate can be determined by listening and measuring the time intervals of operation and the time intervals of non-operation. For a 2.5 watt clock, energy use for a week is

$$2.5\ \text{W} \times \frac{1\ \text{kW}}{1000\ \text{W}} \times \frac{24\ \text{hrs}}{\text{day}} \times \frac{7\ \text{days}}{\text{wk}} = 0.42\ \frac{\text{kWh}}{\text{wk}}\ .$$

In assessing how their present appliances can be replaced by more energy efficient ones, students will want to examine the yellow energy efficiency tags on appliances at appliance and department stores.

Controlling the time of operation of appliances to minimize their energy use can be done manually by a conscientious consumer or by automated control in a "Smart House." The controls in a "Smart House," while adding their own cost to the price tag, also offer the following advantages: (1) improved security and (2) additional financial savings by programming certain appliances, like dishwashers, to run when electricity costs are lowest.

INSTRUCTION SHEET 1, continued

Student Activity

In order to plan your house to use electric energy efficiently, you need to know how much electric energy you are using now. You can survey your present electric energy use by filling out a table like on the next page. Start by inventorying your electric appliances and listing the number of each in column 1 of the table — i.e., how many electric clocks you have. Next fill in column 2 by reading the power requirements (in watts) on each of your appliances. (If the number of amperes is given instead, multiply this by 115 volts to determine the number of watts.) If you cannot find this information, use the wattage given in column 2. Divide the wattage in column 2 by 1000 to get the kilowattage in column 3. In columns 4-10 list the number of hours the appliance is used each day for a week. In column 11 add the total number of hours. Multiply the number of hours in column 11 by the number of kilowatts in column 3 to get the number of kilowatt-hours (kWh) in column 12.

(Note: This exercise has been adapted from "Electrical Energy Use in the Home," National Coordinating Center for Curriculum Development, SUNY, Stony Brook, NY 11794.)

After you have assessed your present use of electric energy, you need to investigate how you can achieve the same results with less energy. There are two ways to do this:

1) Use appliances which require less power (smaller number of watts).
2) Avoid needless use of appliances.

Both approaches are addressed specifically in terms of light bulbs in the Instruction Sheets, "Lighting Specifications" and "Special Lighting Features to Promote Energy Efficiency." These approaches to using less electric energy in the home to achieve the same results are being pursued to the fullest in the "Smart House" developed by the National Association of Home Builders with the cooperation of the Electric Power Research Institute. You will want to read about "Smart House" developments in magazine articles to investigate what features are available and decide which you wish to incorporate into your own "smart house."

HOME ELECTRIC ENERGY SURVEY

Appliance	1 Number	2 Wattage	3 Kilowattage	4 Hrs. Dy.#1	5 Hrs. Dy.#2	6 Hrs. Dy.#3	7 Hrs. Dy.#4	8 Hrs. Dy.#5	9 Hrs. Dy.#6	10 Hrs. Dy.#7	11 Total Hrs.	12 Energy (kWh)
Air cond. (sm.)		700										
Air cond. (med.)		900										
Air cond. (lg.)		1200										
Blender		390										
Broiler		1500										
Clock		2										
Coffee maker		890										
Dishwasher		1200										
Dryer (elec.)		4000										
Elec. skillet		1200										
Hair dryer		1200										
Iron		1000										
Light bulb		60										
Light bulb		75										
Light bulb		100										
Microwave oven		1500										
Radio		50										
Range (elec.)		8800										
Refrigerator		330										
Sewing machine		75										
Stereo		100										
TV (b/w)		150										
TV (color)		300										
Toaster		1000										
Vacuum cleaner		650										
Washing machine		500										
Water htr. (elec.)		2500										
Window fan		200										
Other _____												
TOTAL												

INSTRUCTION SHEET 2

LIGHTING SPECIFICATIONS

Background

The amount we pay our electric utility is determined by the amount of energy (measured in kilowatt-hours (kWh)) we use. The amount of light provided by a light bulb depends not only on the amount of energy provided the light bulb but also on how efficiently the light bulb converts the utility's electric energy into light. This efficiency (or more precisely "efficacy") is measured by the ratio of "lumens per watt" — the number of watts represents the amount of electric energy provided the bulb every second and the number of lumens represents the amount of illumination provided by the bulb, adjusted for the sensitivity of the human eye to various parts of the visible light spectrum. Thus a light bulb with a large number of lumens per watt produces a large amount of illumination for a unit of electric energy and is thus an efficient converter of electric energy into light.

Another concern in choosing lighting for a home is economic. Many of the new lighting products on the market use less electric energy and/or last longer. However, they are usually more expensive. To determine the most economical light bulb requires calculating the cost of both buying and lighting it over its lifetime. The cost of lighting the light bulb is found by multiplying the number of kilowatt-hours of energy it uses by the cost of a kilowatt-hour of electric energy. The number of kilowatt-hours is found by dividing the wattage by 1000 (to find the kilowattage) and multiplying by the average lifetime (in hours) of the bulb. Comparing these costs of different light bulbs requires standardizing them to, say, one hour. Taking into account the varying number of lumens provided by light bulbs of even the same wattage additionally requires standardizing the cost to providing one lumen for an hour.

Local utilities usually publish information about energy efficient products for the home. In fact, many even provide them for their customers — it costs less money to use less electric energy than to build a new power plant. In addition to obtaining information about energy efficient light bulbs, students will need to visit local hardware stores and other vendors of light bulbs to collect specific information about light bulbs available in their area: cost, number of lumens, wattage, and average lifetime (in hours). A recommended way to catalog the data gathered and to analyze them for energy efficiency and least economic cost is to set up a spreadsheet like the one on the next page. Note that in calculating the cost of one lumen for an hour, the only products less expensive than the standard incandescent light bulb are the COMPAX and biaxial fluorescent bulb. However, if the lower number of lumens from the MISER and Energy Choice bulbs is ignored, both are slightly less expensive.

The attached spreadsheet considers only fluorescent bulbs that have been manufactured for use in appliances designed for incandescent bulbs. Additional cost and energy savings can come from designing fluorescent lighting directly into a home in place of incandescent lighting.

LIGHT BULB ENERGY EFFICIENCY DATA *

Category	Bulb Type	Cost/bulb	Lumens/bulb	Bulb wattage	Hours lifetime	Cost/kWh	Cost/lumen-hr	Cost/hour	Lumens/watt
100W	standard	$0.72	1750	100	750	$0.10	6.26E-06	0.01096	17.50
	soft white	$0.82	1710	100	750	$0.10	6.49E-06	0.01109	17.10
	s.w.extra life	$1.49	1600	100	1125	$0.10	7.08E-06	0.01132	16.00
	MISER	$1.00	1620	95	825	$0.10	6.61E-06	0.01071	17.05
	Energy Choice	$0.82	1540	90	750	$0.10	6.55E-06	0.01009	17.11
60W	standard	$0.75	870	60	1000	$0.10	7.76E-06	0.00675	14.50
	soft white	$0.82	855	60	1000	$0.10	7.98E-06	0.00682	14.25
	s.w.extra life	$1.49	820	60	1500	$0.10	8.53E-06	0.00699	13.67
	MISER	$0.98	810	55	1100	$0.10	7.89E-06	0.00639	14.73
	Energy Choice	$0.82	780	52	1000	$0.10	7.72E-06	0.00602	15.00
	COMPAX	$19.99	700	15	9000	$0.10	5.32E-06	0.00372	46.67
	biaxial fluor.	$21.60	800	13	10000	$0.10	4.33E-06	0.00346	61.54
75W	standard	$0.75	1190	75	750	$0.10	7.14E-06	0.00850	15.87
	soft white	$0.82	1170	75	750	$0.10	7.34E-06	0.00859	15.60
	s.w.extra life	$1.49	1125	75	1125	$0.10	7.84E-06	0.00882	15.00
	MISER	$1.00	1140	70	825	$0.10	7.20E-06	0.00821	16.29
	Energy Choice	$0.82	1080	67	750	$0.10	7.22E-06	0.00779	16.12
	MISER Circlite	$12.55	1200	27		$0.10			

* Because efficiencies are technically dimensionless ratios of two energies or powers, the lumen/watt ratio is more precisely called "efficacy."

INSTRUCTION SHEET 3

PRINCIPLES OF CONSTRUCTION OF PASSIVE SOLAR HOMES

1. Southern exposure

   a. Why south for this area? (sun's seasonal path and angle)
   b. Available solar energy {[insolation rate][Btu/sq ft/hr]}
      - review **Btu** [about heat in one candle, sun is about 250 Btu/sq/ft/hr, home heating unit is about 100,000 Btu/hr]

2. Insulation

   a. Why insulate? (reduce energy movement and use, acoustical, economic, environmental benefits, human comfort)
   b. How insulation works to inhibit convective, conductive, and radiant energy transfer:

      Convection:

      - air changes per hour
      - convective looping
      - air density
      - stratification
      - infiltration
      - high/low pressure effect of wind

      Conduction losses

      - ceiling
      - wall
      - window
      - door
      - floor

      Radiant

      - transparent and opaque materials

3. Mass Storage

   a. Diurnal swing (excess daytime energy, nighttime supplemental energy)
   b. Explain energy absorption, latent heat, specific heat, release, and change of state

INSTRUCTION SHEET 4

CHOOSING EFFICIENT LIGHTING FOR YOUR HOUSE

Student Activity

When you choose the lighting for your house, you will be interested in two types of optimization:

1) maximizing the amount of light (number of lumens) for the amount of electric energy used ("maximum energy efficiency") and

2) minimizing the cost on your electric bill ("minimum cost").

In many cases both types of optimization can be achieved with fluorescent lighting — i.e., a 30 watt fluorescent bulb will provide more light than a 100 watt incandescent bulb. However, many light fixtures are made for incandescent bulbs, and a comparison between standard incandescent bulbs and more recently available alternatives is in order. Some of these alternatives are incandescent bulbs designed to use less energy and/or to last a longer number of hours. Others are fluorescent bulbs with adapters that allow them to be used in fixtures designed for incandescent bulbs.

Your concern is the number of lumens provided by the bulb and the cost of buying it and lighting it. The number of lumens and the cost of the bulb can be read from the package or shelf label in the store. The cost of lighting it is

(# kilowatt-hours used) x (cost per kilowatt-hour).

In turn the number of kilowatt-hours used is

(wattage/1000 = kilowattage) x (hours of lifetime).

Thus, the cost of lighting the bulb is

(kilowattage) x (hours) x (cost per kilowatt-hour).

Because different bulbs provide different numbers of lumens and last different numbers of hours, it is most useful to calculate the cost of providing one lumen for one hour.

To design the lighting for your house, you will find the following information helpful:

1) publications from your local utility on energy efficient products for the home.

2) costs of and information about specific light bulbs from local hardware stores and other vendors.

A recommended way to compare the costs of alternative light bulbs is to set up a spreadsheet, which can be programmed to do the required calculations for you.

INSTRUCTION SHEET 5

SPECIAL LIGHTING FEATURES TO PROMOTE ENERGY EFFICIENCY

Background

In addition to choosing light bulbs that will produce the same number of lumens for less cost and energy, we can also save energy and money by using light bulbs only when we really need them. For example, many people feel their home is more secure if lights are left lit when they are away. To avoid the cost — in both energy and dollars — of doing this during the day, we can use a timer or a photocell that is sensitive to the amount of light present. Or, to save more energy and money, we can obtain motion sensor light control, which activates light only when motion is sensed by infrared radiation emitted by the moving object. By causing a light controlled in this way to turn on, an intruder is likely to be frightened away. The same control system would allow a property owner to activate outdoor lighting upon arriving home, just when it is needed. The same type of control could also be employed to insure that indoor lights are turned on only when people enter a room and are turned out after they leave. (The time to shutoff after motion ceases to be detected can be selected to be any time between 1 minute and 20 minutes.)

These special lighting features require special lighting fixtures that are more expensive than conventional fixtures. Students will need to calculate the energy savings from using such fixtures if they choose to install them. Of special consideration is the *payback time*, the time required until the savings from the fixture equal its cost. Some students will be more willing to spend money on fixtures with a longer payback time than others.

Student Activity

In addition to choosing light bulbs that will produce the same number of lumens for less cost and energy, you can also save energy and money by using your light bulbs only when you really need them. For example, you might feel that your home is more secure if lights are left lit when you are away. To avoid the cost — in both energy and dollars — of doing this during the day, you can use a timer or a photocell that is sensitive to the amount of light present. Or, to save more energy and money, you can obtain motion sensor light control, which activates light only when motion is sensed by infrared radiation emitted by the moving object. By causing a light controlled in this way to turn on, an intruder is likely to be frightened away. The same control system would allow a property owner to activate outdoor lighting upon arriving home, just when it is needed. The same type of control could also be employed to insure that indoor lights are turned on only when people enter a room and are turned out after they leave. (The time to shutoff after motion ceases to be detected can be selected to be any time between 1 minute and 20 minutes.)

These special lighting features require special lighting fixtures that are more expensive than conventional fixtures. If you choose to install them, you will need to justify their cost. This is usually done by calculating the *payback time*, the time required until the savings from the fixture equal its cost. The cost saved is the cost of not lighting the bulb in the fixture:

(kilowattage of bulb) x (hours bulb is not lit) x (cost per kilowatt-hour).

Given the kilowattage of the bulb (wattage divided by 1000) and your utility's cost of a kilowatt-hour of electricity, you need to find how many hours you need to *not* light the light bulb in order to justify its cost. Adding to this the time the light bulb will be lit tells you how long it will take to save enough money to pay for the special lighting fixture. How long a payback time can you accept?

INSTRUCTION SHEET 6

INSULATING YOUR HOUSE

Background

In order to maintain their house at a constant temperature, students need to replace every unit of thermal energy which escapes from it. The three methods by which thermal energy is transferred are **conduction, convection,** and **radiation.** Loss of thermal energy due to radiation is determined by the relationship of the temperature of the house to that of its surroundings. Loss of thermal energy due to convection can be avoided by eliminating leaks — e.g., by caulking windows and doors, eliminating leaks around electrical outlets, switch plates on outside walls, celing lights, and wherever two pieces of material are joined together.

Minimizing heat losses due to conduction requires lowering the thermal conductance of the walls, ceilings, and floors. This is done by installing insulation. The formula for heat losses due to conduction is given on page 87 of the field test edition of the Principles of Engineering syllabus:

Heat Loss (in Btu's per hour) = A (area in sq. ft.) x U (thermal conductance) x ΔT (temperature difference between inside and outside, in $^{\circ}F$),
where U is the reciprocal of the thermal resistance, R, otherwise known as the R-factor.

According to a booklet published by the Owens-Corning Fiberglass Corporation, the U.S. Department of Energy recommends that homes in New York State be insulated with R-38 in ceilings below ventilated attics, R-11 or 13 in 2" x 4" exterior walls (R-19 in 2" x 6" exterior walls), and R-19 in crawlspace walls or floors over unheated crawlspaces or basements. R-19 insulation means that it takes 19 hours for a Btu of thermal energy to escape through an area of 1 square foot if the difference between internal and external temperature is $1^{\circ}F$.

The R-factor for a given material depends on both the material itself and its thickness. It can be calculated by dividing the thickness in inches by the thermal conductivity.

Note: The Laboratory Investigation under Student Activity focuses on the relationship between insulation and the thickness of the insulator. An activity which focuses on the insulation provided by the same thickness of different materials is "Insulation Testing," which can be found in Appendix D.

Student Activity

In order to maintain your house at a constant temperature, you need to replace every unit of thermal energy which escapes from it. The three methods by which thermal energy is transferred are **conduction, convection,** and **radiation.** Loss of thermal energy due to radiation is determined by the relationship of the temperature of the house to that of its surroundings. Loss of thermal energy due to convection can be avoided by eliminating leaks — e.g., by caulking windows and doors, eliminating leaks around electrical outlets, switch plates on outside walls, ceiling lights, and wherever two pieces of material are joined together.

Minimizing heat losses due to conduction requires lowering the thermal conductance of the walls, ceilings, and floors. This is done by installing insulation. The formula for heat losses due to conduction is:

Heat Loss (in Btu's per hour) = A (area in sq. ft.) x U (thermal conductance) xΔT (temperature difference between inside and outside, in °F),
where U is the reciprocal of the thermal resistance, R, otherwise known as the R-factor.

According to a booklet published by the Owens-Corning Fiberglass Corporation, the U.S. Department of Energy recommends that homes in New York State be insulated with R-38 in ceilings below ventilated attics, R-11 or 13 in 2" x 4" exterior walls (R-19 in 2" x 6" exterior walls), and R-19 in crawlspace walls or floors over unheated crawlspaces or basements. R-19 insulation means that it takes 19 hours for a Btu of thermal energy to escape through an area of 1 square foot if the difference between internal and external temperature is 1°F.

The R-factor for a given material depends on both the material itself and its thickness. It can be calculated by dividing the thickness in inches by the thermal conductivity. The thermal conductivities of several materials (in Btu/hr x ft^2 x °F) are as follows:

material	thermal conductivity
air	0.165
polystyrene	0.2
rock wool	0.26
glass wool	0.29
asbestos	0.55
wood	0.7
cinder block	2.5
brick	5
glass	6
concrete	7
aluminum	1450

Instruction Sheet 6, continued

To calculate the heat losses from your house (in Btu/hour) due to conduction, you will need to determine the area of wall, ceiling, and floor space made of different materials (e.g., wood, glass, concrete) and the difference between internal and external temperature. In the case of layered materials, the R-factor for the composite of layers is the sum of the R-factors of the individual layers.

Calculate and total your heat losses due to conduction by entering these values and doing calculations in a table like the following:

Material	# of square feet x temperature diff. / R-factor

Laboratory Investigation

The conductive heat loss formula and the insulating properties of materials can be investigated by filling different containers of the same surface area with equal amounts of ice water (from which all ice has been removed) and measuring the temperature of the water in each container every minute until it increases by one degree. Particularly appropriate are nested sets of one, two, and three paper or polystyrene cups, respectively. In each case the cup must be covered with as good a thermal insulator as its walls — e.g., overturned polystyrene cups to serve as lids for other polystyrene cups. Holes in the lids for thermometers must be carefully inserted so that the thermometer fits into the lid as snugly as possible. How does the time it takes for the temperature of the water in a nest of two cups to increase by one degree compare with the time for the temperature of the water in one cup to do the same?

If mercury thermometers are used, great care must be taken not to break them and release toxic mercury vapor into the environment. Because polystyrene cups tip over easily, they should be supported by a ring stand. Another way to support a cup is to nest it in a glass beaker. This has the effect of providing further insulation by creating an air space between the cup and beaker. How does this affect the time for the temperature of the water in the cup to increase by one degree?

INSTRUCTION SHEET 7

COMPARISON OF SOLAR HOME TYPES

	Advantages	Disadvantages
Active	• none known with the possible exception of integral solar hot water	• collectors on roof • weight • mounting systems • damage from elements • air leaks • fluid leaks • freezing • control and pump maintenance • storage system leaks • cost • safety
Passive	• direct solar gain through south glass • low maintenance • less expensive than active	• siting requirements • diurnal temperature swings • uneven temperatures within structure • direct gain mass required • no solar heated hot water • active residents required
Passive/Hybrid	• direct solar gain through south glass • direct and indirect mass storage • low maintenance • less expensive than active • very even temperatures throughout structure	• siting requirements • no solar heated water • some energy needed to store and retrieve energy • remote mass increases cost

See Appendix E, "A Passive Solar House," for related activities.

INSTRUCTION SHEET 8

DESIGNING A PASSIVE/HYBRID HOUSE

Some activities for groups:

Architectural/mechanical

- Design the solar structure's exterior, considering:
  - square footage
  - solar percentage
  - scale
  - construction materials and methods
  - overhangs
  - insulation package
  - percent and type of glazing
  - size
  - materials
  - construction
  - location of mass

Civil

- Develop site selection factors, analysis, and recommended modifications

Chemical

- Investigate the advantages and disadvantages of phase change mass versus static mass.

Electrical/Computer

- Develop monitoring and data gathering methods for energy use and movement throughout the structure.

INSTRUCTION SHEET 9

ANALYSIS OF MODEL HOUSE

- Measure temperature gain within the structure with solar south orientation.
- Measure temperature within the structure with orientations of 15, 30, 45, and 90 degrees from solar south.
- Measure and compare temperature gain within the structure with no south glazing, with 30%, 40%, and 60% glazing. Plot a graph with temperature gain vs. time.
- Measure and compare temperature gain within the mass with the various glazing percentages with no fan and with fan.
- Measure and compare ambient air temperatures in the structures vs. temperatures in the mass during gain (day) periods.
- Measure and compare ambient air temperatures in the structure vs. temperatures in the mass during loss (night) periods.

References

diChristina, Mariette. "Canada's Energy Miser," *Popular Science*, 137 (6), 94-97 (Dec 90).

Foster, Ray. "The Electric Smart House At Your Service," *Nuclear Industry*, 10-14 (Fourth Quarter 1991).

Gilmore, V. Elaine, Denniss Normille, and David Scott. "U.S., Japan, Europe: The World's Smartest Houses," *Popular Science*, 237 (3), 56-65+ (Sep 90).

Gilmore, V. Elaine. "Smart House," *Popular Science*, 233 (2), 42-46+ (Aug 88)

Hawkins, William J. "Smarter House — Now," *Popular Science*, 233 (2), 56-58 (Aug 88).

Moore, Taylor. "The Smart House — Wired for the Electronic Age," *EPRI Journal*, 5-15 (Nov 86).

Pitta, Julie. "Gifted Houses," *Forbes*, 146 (9), 365-366 (22 Oct 90).

Seisler, Jeffrey. "The Home of the Future," *Consumers Research Magazine*, 70 (2), 34-37 (Feb 87).

Supplies and Equipment

Note: Substitutions are possible depending upon fiscal conditions.

Solar House (scale 1" = 1')

Supplies	Equipment
foamboard 1/4" x 24" x 36"	safety glasses
acrylic sheet (plexiglass)	layout tools
polyisocyanurate (Hi-R, Max-R)	utility knives
aluminum tape 2" x 60 yds.	glue guns
glue sticks	jig saw

Mass Storage

Supplies	Equipment
plywood 1/4" x 4' x 8'	TA saw
copper tubing 3/4 x 5'	hammers
copper tee fittings 3/4" x 3/4" x 1/2" (6)	tubing cutter
copper caps 3/4 (2)	propane torch
copper tubing 1/2" x 8'	
copper 90 L fittings (6)	
solder	
flux	
4d nails (1 lb)	
sand (quantity ?)	

Testing and Data Gathering

Supplies	Equipment
IBM personal science lab	IBM computer
temperature probes	thermometers
computer paper	

Appendix C

Degree Days

HEATING DEGREE DAYS Base 65 deg. F SYRACUSE, NEW YORK

SEASON	JULY	AUG	SEP	OCT	NOV	DEC	JAN	FEB	MAR	APR	MAY	JUNE	TOTAL
1961-62	14	13	70	292	724	1107	1262	1211	937	552	172	25	6379
*1962-63	6	16	185	422	875	1250	1364	1300	948	575	319	70	7330
1963-64	14	43	240	276	597	1365	1205	1190	922	546	160	89	6647
1964-65	2	30	154	475	636	1087	1370	1125	1069	676	215	132	6971
1965-66	27	50	144	521	782	1011	1422	1158	945	665	429	80	7244
1966-67	6	7	186	473	652	1104	1059	1275	1030	595	453	13	6853
1967-68	24	35	154	407	812	995	1438	1266	979	501	345	83	7039
1968-69	27	41	54	391	745	1163	1256	1152	1063	536	306	103	6837
1969-70	22	20	134	425	730	1269	1508	1139	1027	536	244	115	7169
1970-71	7	27	150	388	692	1222	1437	1069	1040	658	295	50	7035
1971-72	13	51	96	256	840	980	1189	1216	1098	731	204	84	6758
1972-73	9	23	98	567	833	1053	1128	1217	687	547	325	31	6518
1973-74	2	12	164	344	723	1094	1200	1206	1004	493	339	52	6633
1974-75	16	3	202	565	726	1069	1100	1026	1026	749	138	46	6666
1975-76	3	32	230	357	545	1154	1449	936	872	509	329	47	6463
1976-77	24	45	179	556	869	1303	1520	1086	767	511	209	111	7180
1977-78	14	60	121	444	624	1162	1348	1322	1097	677	252	92	7213
1978-79	10	1	184	470	735	1062	1315	1457	796	591	242	74	6937
1979-80	19	39	146	454	607	971	1215	1302	1007	511	194	115	6580
1980-81	3	0	120	496	814	1307	1544	869	882	446	221	27	6729
1981-82	2	4	145	523	775	1110	1552	1114	978	626	183	79	7091
1982-83	13	57	152	449	628	951	1280	1073	902	615	351	67	6538
1983-84	11	25	140	457	769	1312	1432	949	1246	563	386	68	7358
1984-85	16	33	227	390	797	971	1329	1048	882	514	193	109	6509
1985-86	10	18	121	415	702	1200	1266	1156	856	471	172	76	6463
1986-87	12	50	155	468	838	1027	1270	1208	831	395	211	35	6500
1987-88	7	27	138	529	717	1007	1290	1167	942	571	187	131	6713
1988-89	9	33	150	574	653	1148	1120	1175	989	639	242	38	6770
1989-90	3	36	151	406	779	1554	976	1001	849	496	319	43	6613
1990-91	4	4	160	386	675	967							

COOLING DEGREE DAYS Base 65 deg. F SYRACUSE, NEW YORK

YEAR	JAN	FEB	MAR	APR	MAY	JUNE	JULY	AUG	SEP	OCT	NOV	DEC	TOTAL
1969	0	0	0	0	22	94	183	222	102	1	0	0	624
1970	0	0	0	8	22	74	160	127	51	3	0	0	445
1971	0	0	0	0	17	145	145	124	117	4	0	0	552
1972	0	0	0	0	9	78	262	160	61	0	0	0	570
1973	0	0	0	7	0	177	249	281	79	2	0	0	795
1974	0	0	0	14	6	77	148	128	31	1	0	0	405
1975	0	0	0	0	80	114	221	138	1	1	0	0	555
1976	0	0	0	16	2	141	84	83	31	0	0	0	357
1977	0	0	1	12	71	47	202	138	49	0	0	0	520
1978	0	0	0	0	49	92	231	215	36	0	0	0	623
1979	0	0	0	2	50	109	232	134	46	22	0	0	595
1980	0	0	0	0	41	62	243	279	80	1	0	0	706
1981	0	0	3	4	47	125	264	180	49	0	0	0	672
1982	0	0	0	0	18	25	186	72	25	0	3	0	329
1983	0	0	0	0	2	125	236	155	70	7	0	0	595
1984	0	0	0	0	4	88	119	154	14	1	0	0	380
1985	0	0	0	7	30	26	165	144	87	0	0	0	459
1986	0	0	5	1	52	62	201	112	28	0	0	0	461
1987	0	0	0	7	73	142	280	143	29	0	0	0	674
1988	0	0	0	0	33	112	296	251	32	9	0	0	733
1989	0	0	0	0	37	112	198	144	59	0	0	0	550
1990	0	0	5	33	2	118	222	177	51	16	0	0	624

Appendix D

INSULATION TESTING

INTRODUCTION

Why is it that some houses have small heating needs while others of the same size use so much fuel? Insulation often makes all the difference.

In this activity you will compare the insulating ability of several different materials.

OBJECTIVES

At the completion of this activity you should be able to:

- o construct a device to be used in measuring the effectiveness of insulation materials.
- o compare the insulating abilities of various materials.

SKILLS AND KNOWLEDGE YOU NEED

- How to read a thermometer and a clock or timer.
- How to measure liquids using a graduated cylinder.
- How to construct and interpret graphs.

MATERIALS

- A standard laboratory calorimeter or a 3 lb. coffee can and a one lb. coffee can, both with plastic lids.
- One thermometer.
- One ring stand.
- One bunsen burner.
- A clock or timer.
- Insulating materials, such as vermiculite, styrofoam, urethane foam, fiberglass, cellulose, sand, paper, etc.
- Safety goggles and gloves.

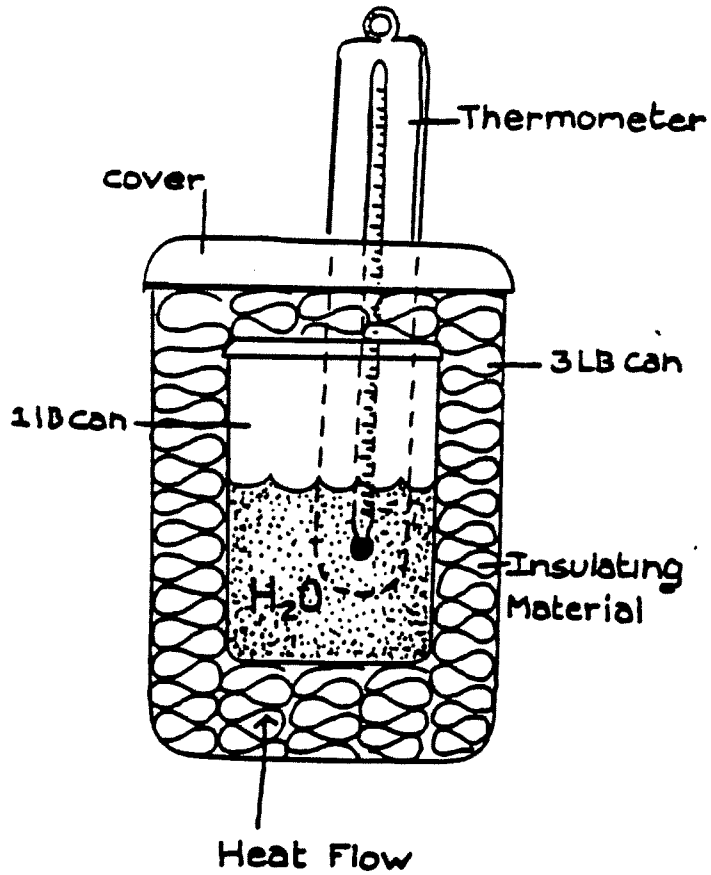

METHOD

1. Assemble your insulation tester:

   a. Using a punch, place a hole in the plastic lids of the two coffee cans.

   b. Place a layer of one kind of insulation around the inside and on the bottom of the 3 lb. can in such a way that the one lb. can fits inside comfortably. (See diagram.) Other students will use different insulation materials.

   c. Place the one lb. can inside the 3 lb. can.

   d. Place 300 ml. of water at room temperature in the one lb. can.

   e. Place the plastic lids on the cans.

   f. Carefully insert the thermometer through the holes in the two lids.

2. Place the insulation tester on a ring stand.

3. Record the temperature of the water.

- What might be some of the sources of experimental error in the measurements of heat flow you made with this apparatus? How could these be reduced?

- Find out what type of insulation you have in your home. How does it compare with others tested in this activity?

DATA TABLE A

TIME (min)	MATERIAL A	MATERIAL B	MATERIAL C
	temp. ^{o}C	temp. ^{o}C	temp. ^{o}C
0			
.5			
1			
1.5			
2			
2.5			
3			
3.5			
4			
4.5			
5			
5.5			
6			
6.5			
7			
7.5			
8			
8.5			
9			
9.5			
10			

INSULATION TESTING

Suggested Grade Level and Discipline

7-12 Science
Physics

Background Information

There are a number of factors which determine the effectiveness of insulators. The type of material is a major consideration. The density of the insulation and its water vapor content are two other important variables. The number of small enclosed "dead" air spaces is still another. R-value is the measurement used to communicate insulating capacity.

The most common types of insulation are fiberglass, mineral wool, and cellulose that has been treated with chemicals to retard flammability. Various foams sold in sheets or processed on site are gaining in popularity. Homes built before the last decade often have 1½ inches of insulation in the ceilings and none in the walls. Properly insulated ceilings have the potential for reducing heat losses by 20%.

Hints on Gathering Materials

- Most physics labs have commercial calorimeters which are suitable for this investigation. The metal containers are good thermal conductors and are less apt to contribute to errors than glass containers, which themselves are insulators.

- Insulating materials can be gathered from a variety of sources. Science equipment is often packed in styrofoam or vermiculite.

Suggested Time Allotments

- One 20-minute period to go over instructions, assemble equipment, set up lab notebooks, break up into groups and assign timer, recorder, etc.

- One 40-minute period to conduct the activity, copy and exchange results, etc.

Suggested Approach

- Break students up into groups of 4-5 students.
- Have each group investigate a different type of insulation.
- Students should be encouraged to do two trials and average results.
- Have students follow the method from step 1 to step 5 for different materials or different trials with the same materials. The graphing can be assigned as out of class work.
- Students not familiar with graphing can be directed to skip steps 6 and 8.

Typical Results

- Using a set of 10-minute trial runs, the following heat flow values were obtained:

fiberglass	- 1.44 degrees per minute
air	- 2.80 degrees per minute
paper	- 2.0 degrees per minute

Precautions

- *Use a medium to small flame on bunsen burner. Keep flame temperature as consistent as possible on all trials.*
- *Make sure students wear safety goggles.*
- *Be careful not to melt plastic lids.*
- *Keep thermometer from touching sides and bottom of can.*
- *Insulation should be packed loosely in the coffee cans. Use gloves.*
- *Pretest the process using your heat source and a moderate flame, as the insulation may char under high heat.*
- *CAUTION: foamed plastic board insulation is highly flammable, as is styrofoam unless it has been treated with a flame retardant.*

References

Solar Energy Experiments for High School and College Students, Thomas Norton, Rodale Press, Emmaus, Pennsylvania, 1977.

Science Activities in Energy Conservation, Oak Ridge Associated University, USDE EDM-1049

A Passive Solar House

Source: New York Energy Education Project, Renewable Energy

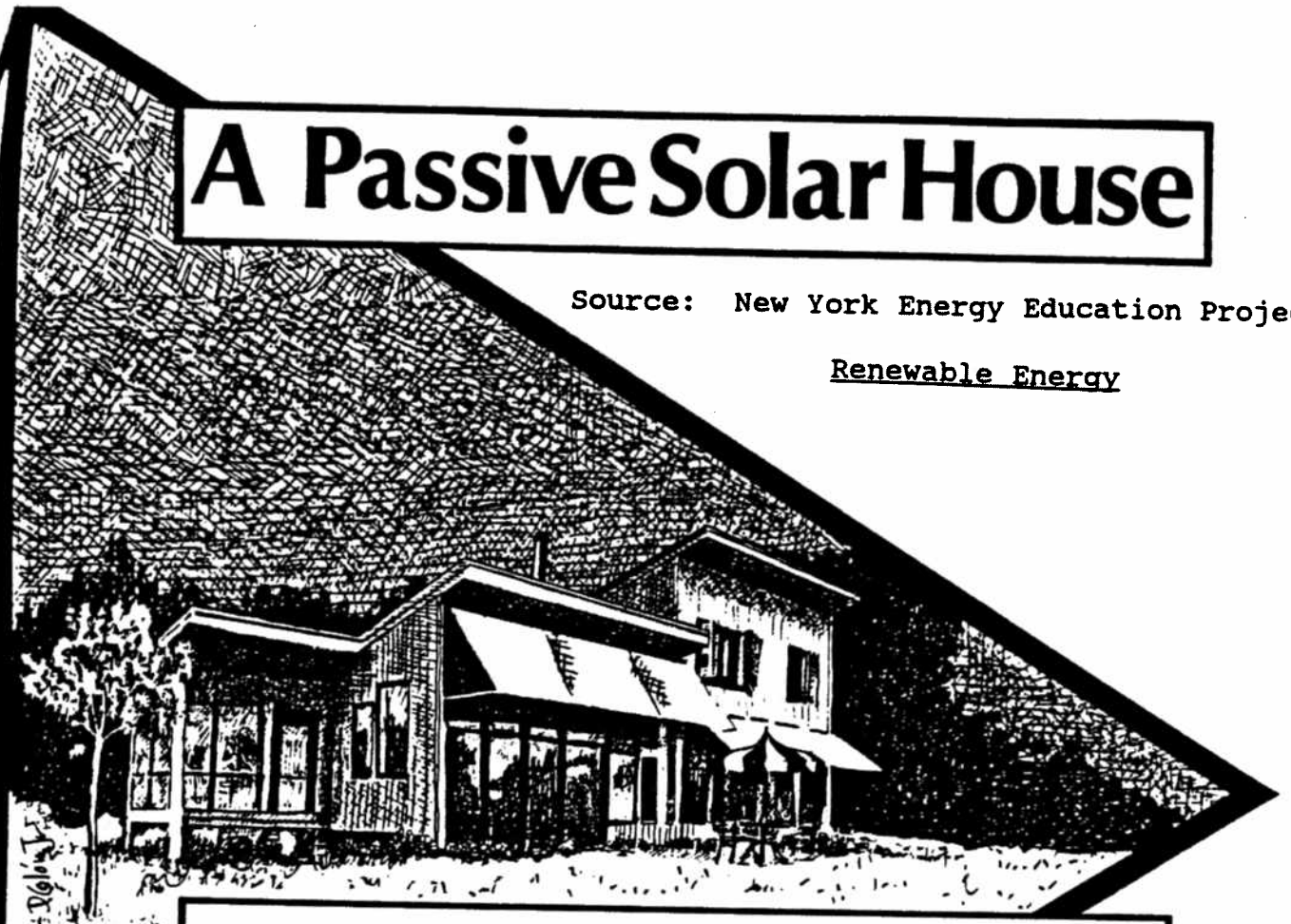

Every house collects solar energy. Sunlight falls on the house, passing through windows and skylights and being absorbed by roof and walls. The sun helps to heat the house in cold weather, but it can overheat the house in warm weather.

Some houses are specially designed with the sun in mind. The designer plans the house so that it collects as much sunshine as possible in winter, and as little as possible in summer. Such houses are called passive solar houses, and they can save their owners a lot of expense in heating and air-conditioning.

Based on what you know about the sun and wind, you are going to assemble, locate, and landscape a model passive solar house. To help you get started, think about these questions.

What is the sun's path in the winter? In the summer?

Where does most wind come from in the winter? In the summer?

Where should most of my windows be?

What kinds of trees and shrubs should I have around my house, and where should I place them?

objectives

At the completion of this activity, you should be able to

- recognize the basic features of a passive solar house,
- use your knowledge of trees and shrubs to landscape your model house for energy conservation, and
- use your knowledge of the angle of the sun during different seasons to determine how effective your model is as a passive solar house.

skills and knowledge you need

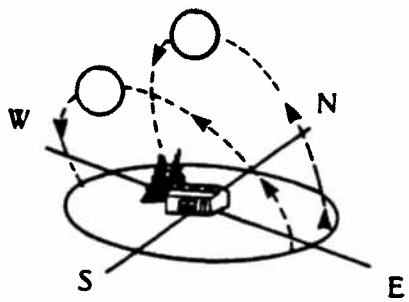

The skills of basic cutting, taping, and diagramming

The knowledge that the sun's rays strike the earth's surface at a lower angle in winter than in summer

The knowledge of the direction of the winter winds and summer breezes in your area

materials

scissors

tape

toothpicks

straight edge

Worksheets A, B, and C

a light source (flashlight, lamp)

crayons or markers (optional)

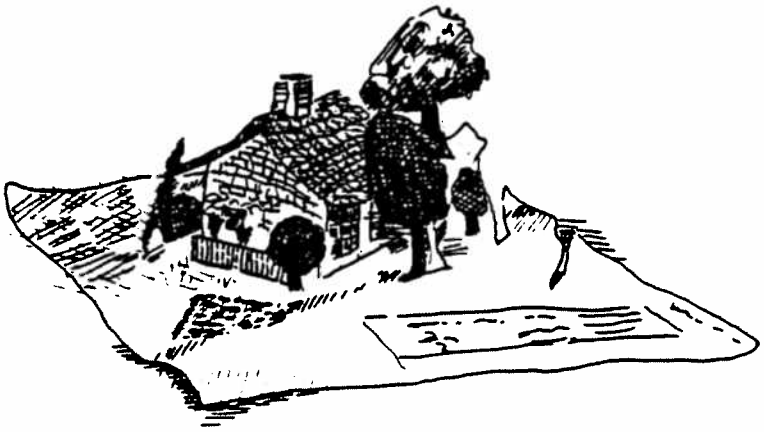

procedure

1. Select one model from the two model house drawings on Worksheet A. Cut out, fold, and assemble (without taping) the model you chose.

2. Place the folded model house on the plot plan (Worksheet B) and decide on the setting of the dwelling. In which direction will it face? Decide how many windows and doors your house should have and choose their locations based on the setting of the house. Then unfold the model and draw in the windows and doors neatly with a pencil and straight edge. Color the house if you wish.

3. Refold and tape the model together. Then tape the roof in place. Place the completed house on the plot plan.

4. Find out the directions of the winter winds and summer breezes in your area. Draw arrows in the proper corners of your plot plan to indicate these directions. Label each arrow.

5. Draw in fencing (if any), driveway, and sidewalks. Can you place these features to provide protection from winter winds?

6. Cut out the model trees and shrubs (Worksheet C) and use them to trace out as many additional trees and shrubs as you want to use in landscaping. Cut these out and fold their bases. For added strength, tape toothpicks to the backs of the trees. Keep in mind that deciduous trees lose their leaves in fall and that winter winds and summer breezes come mostly from one direction. Plan how you will landscape the plot, then tape the summer deciduous models in place. Tape the models of the winter deciduous trees directly behind the summer models. Tape all other models in place.

7. Find out the noontime angle of the sun in your area for winter and for summer. Set the light source at the noontime angle for the summer sun. Check your house and landscaping for the effectiveness of summer shading. How many windows receive direct summer sunlight? Do your deciduous trees shade the house to help keep it cool? Does your roof overhang provide shading from the summer sun? Does your landscaping channel cooling summer breezes toward your house?

8. Now fold down your summer tree models so that the winter models are visible. Set the light source at the noontime angle for the winter sun. Again check your house and landscaping, this time for the effectiveness of winter solar heating. How many windows receive direct winter sunlight? Do any trees block the sun's rays, preventing them from warming the house? Does the roof overhang allow the winter sunlight to pass through your windows? Do your evergreen trees break and slow those cold winter winds?

questions

1. How does your model house compare to those of other students in placement of windows, size of doors, and roof arrangement?

2. Which model house in Worksheet A is best designed for winter heating and summer cooling? Why?

completed the activity, how could you improve your model house and landscaping to increase their effectiveness in winter heating and summer cooling?

4. A passive solar house such as you have constructed is considered one way to conserve energy. Why?

5. How should homes be landscaped to conserve energy?

6. In which direction should the roof overhang so that winter sunlight passes through windows and summer sunlight is blocked out?

7. Define the following terms: deciduous tree, evergreen tree, roof overhang, passive solar house.

looking back

You have now planned the design and landscaping of a passive solar house. In doing this you may have discovered that there are many simple things you can do to use the sun's heat in cold weather and still avoid overheating in summer.

Did you consider which way the house should face? How many windows and doors did you plan, and where did you put them? Did you use roof overhangs for summer shade? What about evergreen windbreaks and deciduous shade trees? A passive solar house uses all these features to save energy by natural heating and cooling.

going further

Make the improvements to the model house that you suggested in your response to Question 3.

Add a sunspace or solar greenhouse to your model house. Indicate an earth berm on the proper side(s).

Obtain additional copies of Worksheets A, B, and C. Redesign and landscape the same house for an active solar energy heating or hot water system. Draw flat plate solar collectors on the south-facing roof. Determine the best roof pitch for the collectors and redraw the sidewalls to obtain this pitch.

Obtain additional copies of Worksheets A, B, and C. Redesign the same house to include a cooling system, such as an evaporative cooling system. What factors will have to be considered for such a system?

Construct a passive solar model home of your own design from other materials, such as wood or plaster of paris.

Windows permit passive solar heating due to the greenhouse effect. Explore this principle further by completing Activity 2 in the Earth Science Activities book.

Worksheet A
Model Houses

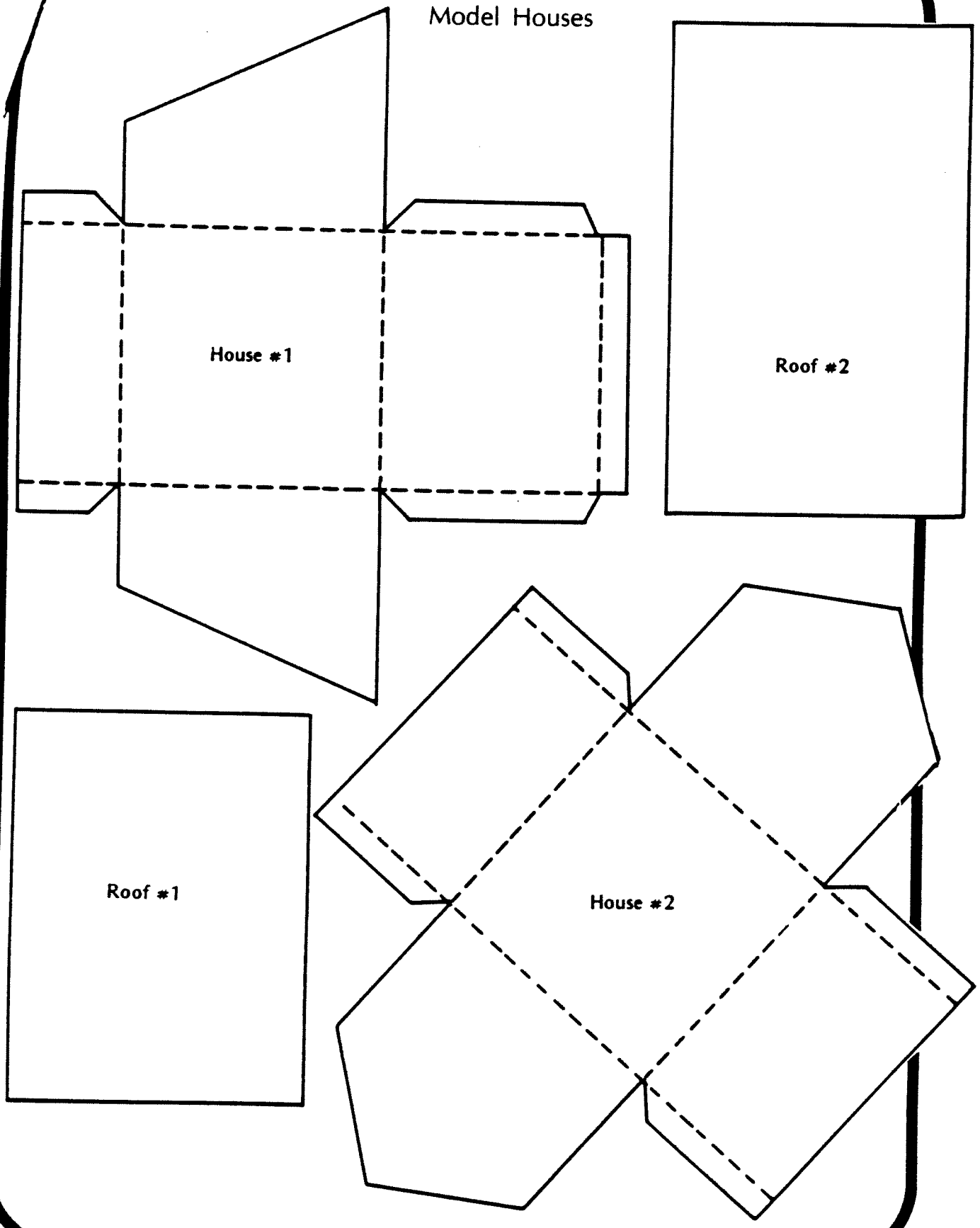

Worksheet B
Plot Plan

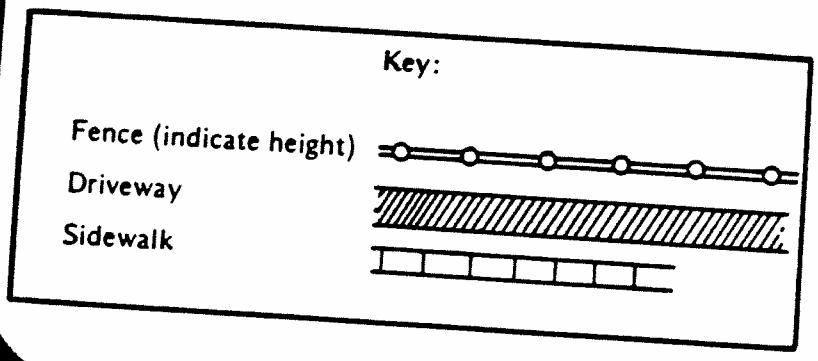

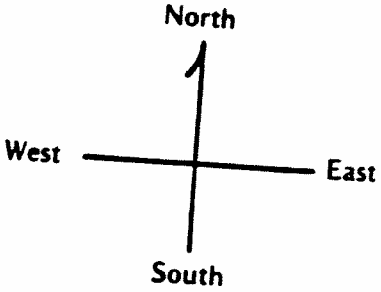

Worksheet C
Model Trees and Shrubs

Shrub

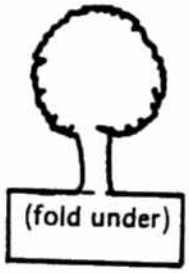

Small Deciduous Tree, Summer

Small Deciduous Tree, Winter

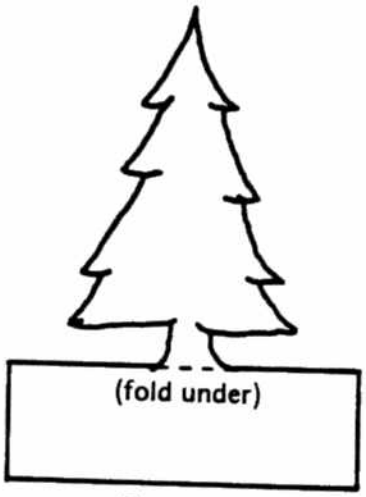

Evergreen

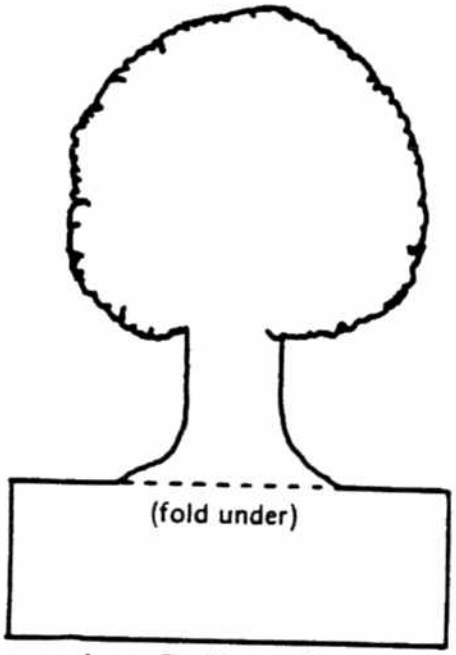

Large Deciduous Tree, Summer

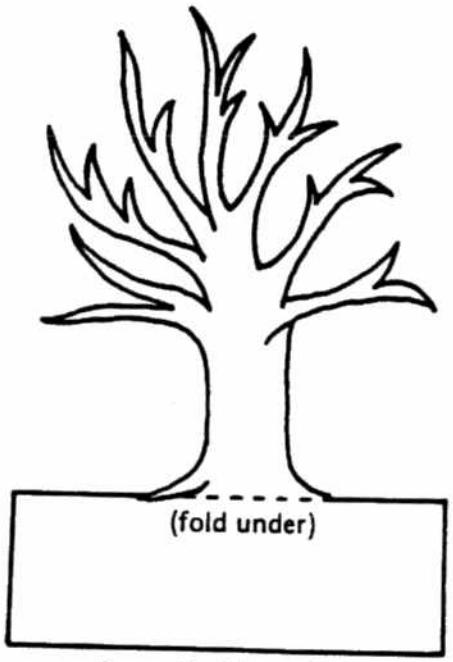

Large Deciduous Tree, Winter

Teacher Information

A Passive Solar House

Suggested Grade Level and Discipline

Science, grades 7-9
Home Economics
Consumer Education
Art

Skill Objectives

Applying principles of passive solar construction to the structural design and landscaping of buildings

Major Understandings

Buildings may be designed and landscaped, through proper placement of windows, doors, and vegetation, to maximize the greenhouse effect.

A roof overhang should block the more intense solar rays of summer, but should allow winter sunlight to enter windows.

Deciduous trees will provide a building with shading from the intense solar rays of summer but allow those rays to strike the building during fall and winter.

Coniferous trees serve as excellent windbreaks and can be located to reduce infiltration heat losses from a building during winter. Vegetation can also be located to channel summer breezes toward the building.

Background

Homes can be heated by the sun in winter and protected from the sun's heat in summer. If this is done without mechanical equipment, then the house has a passive solar system. But if heat is transferred by pumps and fans, which require an outside source of energy, then the house has an active system. In a passive solar system, heat flows by natural means such as convection, conduction, and radiation.

Passive solar design is really very simple, and can be incorporated easily into a new or existing home. Basically, a passive solar home collects heat in winter through south-facing glass (glazing) and stores the excess in a thermal mass, from which it is distributed slowly when indoor temperatures drop at night or on cloudy days. A passive house will have more windows on the south side and fewer (or none) on the north side. Windows can be double-glazed on the south side and even triple-glazed on the other sides. In winter, all windows should be covered at night with insulating interior treatments to keep heat loss at a minimum. The house should be well insulated and weather-stripped to avoid infiltration and conduction heat losses as much as possible. To provide protection from the heat of the summer sun, a passive solar home should have overhangs to shade windows on the south and west sides. Exterior window treatments should be used to prevent sunlight or heat from entering. Vents and windows should be placed to increase natural ventilation or to exhaust excess heat from the house.

In addition, a passive solar house must be sited properly on its lot. The position of the sun at different seasons of the year can be charted to determine which portion of the site receives the most sun between 9:00 A.M. and 3:00 P.M. Hills, large trees, and other buildings should not obstruct the sun during the heating season.

Proper landscaping of the home contributes to energy conservation. Deciduous trees should be planted on the south and west sides of the house. Their leaves will shade the house in summer; but in autumn, when the leaves fall, the sun's rays will strike the house. Coniferous trees should be planted on the windward side of the building. They provide a windbreak for the prevailing winds. Wind reduction will cut infiltration heat losses. Other vegetation should be planted to channel cooling summer breezes toward the building.

... the direction of the prevailing winds for your area.

Find the sun angles for winter and summer for your latitude. Solar books, solar contractors and dealers, and your local weather station are all sources.

Worksheets A, B, and C can be reproduced by various copying machines on heavy weight paper.

Suggested Time Allotment

Two class periods for model construction

One class period for class discussion

Suggested Approach

Have the students work individually or in pairs. They should compare results after completing their designs.

Leaving some of the work on display will encourage further discussion and investigation.

An alternative would be to assign the activity for homework and to follow up with a full period of display and discussion directed by the teacher.

You might follow up this activity with a field trip to a local passive solar home.

Points for Discussion

What factors would you consider in designing and building a passive solar home?

How might you modify an existing home in order to increase its passive solar heating or cooling effects?

What facts could you present to a homeowner in order to convince him that proper landscaping can promote energy conservation?

Typical Results

Well-designed model homes should have most windows on the south side, a roof overhang on the south, a coniferous windbreak in the direction of the winter winds, and deciduous trees to the south.

Construction of the dwellings and vari landscapes will vary a great deal in quali This should not receive much emphasis as is not directly related to the objectives.

Inspect each passive home design and discuss its features with its designer.

Ask students to evaluate a model house and site drawing in terms of passive solar design.

Modifications

Model house drawings can be traced onto tagboard, then cut out. This will provide sturdier models. You might want to provide larger scale cut-outs for students to trace, as they might find it easier to work with larger models.

Modify the activity for higher ability students by encouraging precise measurement of sun angle, roof pitch, and overhang length.

Students can research thermal storage units and then build them into their model homes. Suggestions include thermal storage walls, roof ponds, storage tanks, and Trombe walls.

References

Solar Energy Education Reader
Part III: "PS Energy House," p. 162.
"Virginia is for Louvers," p. 172.
"How to Site a House," p. 181.
Part IV: "Solar Homes: The Shape of Things to Come?", p. 395.
(Solar Energy Education Project, NYS Education Department, Albany, NY 12234, 1981, contact the project for price.)

Landscape Design That Saves Energy, Anne Simon Moffat and Marc Schiler.
(William Morrow and Co., Inc., Wilmor Warehouse, 6 Henderson Dr., West Caldwell, NJ 07006, 1981, $17.95.)

Natural Solar Architecture: A Passive Approach, David Wright.
(Van Nostrand Reinhold Co., Lepi Order Processing, 7625 Empire Dr., Florence, KY 41042, 1978, $8.95/paper.)

1979 NYSERDA Passive Solar Design Awards, NYS Energy Research and Development Authority.
(Technology Transfer, Rockefeller Plaza, Albany, NY 12223, 1980, $7.00/paper.)

The Passive Solar Energy Book, Edward Mazria.
(Rodale Press, Inc., 33 E. Minor St., Emmaus, PA 18049, 1979, $12.95/paper.)

Solar Site Planning: A Guide to Residential Landscaping for Energy Efficiency, David Marlatt et al.
(Southern Solar Energy Center, 61 Perimeter Park, Atlanta, GA 30341, contact SSEC for price.)

Southern Solar Homes: A Planbook of Energy Efficient Designs for the Southern U.S.
(Southern Solar Energy Center, 61 Perimeter Park, Atlanta, GA 30341, 1980, contact SSEC for price.)

"Passive Solar Heating," Solar Factsheet 121.
(Conservation and Renewable Energy Inquiry and Referral Service (CAREIRS), P.O. Box 8900, Silver Spring, MD 20907, 1980, single copies free.)

BUILDING A MODEL SOLAR-ELECTRIC CAR

I. CASE STUDY DESCRIPTION

The petroleum-based fuel burned by private automobiles and light trucks and vans is a major source of greenhouse gases and smog. In addition, the lifetime of known supplies of petroleum and natural gas is usually estimated to be about 50 years, sometimes less. Hence there is a need for vehicles that produce radically reduced exhaust emissions and that do not use petroleum-based fuel or natural gas. Currently, some delivery vans operate on electricity as their primary energy source, with solar energy used as a supplement. The scope of this case study is the design, construction, and test of a small, working model of such a vehicle: a solar-electric car.

The case study is shaped by the design process, which is fundamentally a decision-making process. An understanding of background material covering the mechanical and electrical theory underlying the operation of solar-electric cars must be gained to insure that the students have the information necessary to make these decisions. This understanding will be attained through a combination of classroom study and library research. The need to make good decisions and interest in the vehicle motivate this work. Teachers should consider arranging the case study as a competition between teams. This strategy supplies additional motivation and provides more resources for each car.

Each designer (or design team) should keep a notebook in which sketches, calculations, photographs, speculations, questions, measurements, etc. are placed. The teacher should review the notebooks periodically.

The first step is to define the characteristics that the model car must have and those that are desirable. These characteristics are few compared to a full-scale car. They arise from the methods chosen to evaluate the completed vehicle. However, this step provides an opportunity to study briefly the missions that full-scale, solar-electric cars could carry out and their advantages and disadvantages compared to other alternate-powered vehicles. The teacher can set up the study so that the students, or teams, (1) design and build a solar power system for an existing toy electric car to produce specified performance, (2) design and build a model from the ground up, or (3) have the flexibility to take whatever approach their ingenuity dictates.

The second step is to generate at least two alternate conceptual designs. A conceptual design describes the main features of the car, such as its weight, overall dimensions, range at design speed, and shape. Each concept should have all of the required characteristics and as many of the desired characteristics as possible. Predicting the performance of these conceptual designs will require the application of Newton's

second law and some other simple relationships, using graphs, simple algebra, and simple computer programs (see Section IX.D) to describe the interaction of the car with the sun (or other radiation source), the atmosphere, and the road.

The third step is to select one of the alternate designs, work out the details of its application, and build the model. Before beginning to build, the design should be drawn using a computer-aided design (CAD) system or manual drafting equipment, and, together with the calculations and reasoning supporting the design (here is where the notebooks will come in handy), presented to the teacher. After initial construction, and prior to demonstration, the students can test their cars using the methods described in Section IX.

The final step is to demonstrate the car. The most effective way to do this, because it generates the most interest and enthusiasm, is to stage a race over a straight outdoor (or indoor, if the weather is uncooperative) course.

II. DEFINITION OF THE PROBLEM

The students' task is to design, construct, and test a model solar-electric vehicle based on general specifications supplied by this case study. Other constraints tailoring the specifications to fit the situation at a particular school may be added by the teacher. Students will be expected to support their design decisions with facts developed from their study.

III. PERFORMANCE OBJECTIVES

A. Students will examine energy conversion as used in modern transportation.

   1. Students will describe how heat energy is converted to rotary motion in a modern internal combustion engine.

   2. Students will examine advantages and disadvantages of present methods and alternate methods of energy conversion for modern transportation.

B. Students will learn how light energy may be converted for use as an alternate energy source.

   1. Students will describe how light energy is converted to electrical energy using solar cells.

   2. Students will describe how electrical energy is converted into the rotary motion of an electric motor.

   3. Students will describe how energy is used in the electric motor to provide motion to the vehicle.

4. Students will describe how energy is lost in the electric motor in the form of friction and heat.

C. Students will learn how losses affect performance in a solar powered vehicle.

1. Students will describe the effects of drag, frictional forces, and mass on a solar powered vehicle.

2. Students will calculate the effect scale has on losses and how models may not mirror the true nature and quantity of losses found in a full-scale design.

3. Students will examine the trade-offs in designing a solar powered vehicle to reduce losses (e.g., use a smaller electric motor to reduce overall mass at the expense of lower performance).

D. Students will learn how to design a model solar powered vehicle.

1. Students will develop criteria for solar powered vehicles (e.g., basic transportation, racer, family vehicle).

2. Students will compare design trade-offs for creating solar powered vehicles.

E. Students will examine the design considerations in developing a solar powered racer.

1. Students will develop criteria for a solar powered racer including: maximizing speed; minimizing drag, mass, and friction; and maximizing solar collection capability.

2. Students will examine backup systems used to offset irregular solar collection during a race.

3. Students will develop a means of measuring the performance of their solar racer design.

4. Students will develop a means optimizing their design for the use intended based upon performance measurements.

IV. EXPLANATION OF SPECIFIC MATRIX

The major focus of this study relates to the conversion of solar energy to some form of linear motion found in a solar racing vehicle. The systems employed by any transportation device using solar energy will be explored and investigated to determine which systems (if any) may be employed in the scale racer.

Solar-Electric Car Matrix

CONCEPTS	ACTIVITIES
MODELING	Graph light intensity versus current output of solar cell.
SYSTEMS	Determine the necessary controls required on board for the solar racer to store electrical energy when no external light is available. Determine control systems for speed and direction.
OPTIMIZATION	Determine the necessary trade-offs to maximize speed and efficiency.
TECHNOLOGY—SOCIETY INTERACTION	Examine and discuss the effects of using solar-electric vehicles on society as a whole. Discuss effects of additional need for electrical generation and peak power concept.
DESIGN	Design a scale solar racer and compare its performance to the design values.
ETHICS	Discuss the ethics of advertising the efficiency of an energy conversion. Discuss the ethical responsibility of the automotive industry for air pollution.

V. BACKGROUND MATERIALS

A. Computer Programs

A computer program has been written to cover all the calculations in the instruction sheets. It contains the following: Physical Motion Calculators, Solar Cell Calculator, Angle of Incidence Calculator, Solar Energy and Time Calculator, and Battery Calculator. See Section IX.D for further information.

B. Interactions With Environment

The interactions of the vehicle with its environment (the road, the atmosphere, and the sun) must be understood physically and modeled mathematically in order to understand how to select the characteristics of the vehicle (its shape and weight, for example) to produce a certain speed and range under the design conditions. Instruction Sheets 2, 3, 4, and 5 are notes for study in this area. They are specific and contain both theory and example calculations. Program D.1, Physical Motion Calculators, contains the mathematical models and are intended to speed up the design calculations (see Section IX).

These materials may be reinforced by the Solar Energy Classroom Materials (Reference B.8), "Racing with the Sun" (Videotape C.1), and "Disk I, Construction Set" (C.2), and "Disk II, Solar Tutorial and Driving Simulation" (C.3). These latter two programs are not suitable for actual design; they are more like computer games. But they do illustrate some of the design trade-offs. The Insolation Data Manual (B.7) will be helpful in learning how the solar energy resource is distributed across the United States.

C. Energy Conversion

Whereas air drag, gravity, and rolling resistance produce the energy demand, or load, that must be met to travel at a given speed, the conversion of the sun's radiant energy into mechanical energy and its delivery to the driving wheel, or wheels, is the supply that meets this demand. Instruction Sheets 6, 7, and 8 explain the workings of the solar cells that convert the solar energy into electrical energy, the battery that stores this energy, the electric motor that converts the electrical energy into mechanical energy, and the electric circuit that connects them, work.

There is no book on solar-electric vehicles. Section IX contains two references (B.3 and B.4) on solar cells and batteries as used in stationary systems and a manual on solar energy experiments (B.5). The

first two are written for persons without extensive technical background, and thus are useful to beginners. The manual, while written for college students, is adaptable to high school. The "Solar Cell Calculator" (Program D.2) should be helpful in making calculations for single solar cells and arrays of solar cells.

D. Aerodynamics

1. Aerodynamics - The study of air flow and its effect on moving objects. Other considerations being equal, the lower the air resistance, the faster a vehicle can go. Increased drag increases the amount of work required to move a vehicle. Air offers a resistance to any moving object. Air resistance is influenced by the shape of an object. Air resistance is referred to as aerodynamic drag. If a moving object is streamlined, the air will flow around it smoothly and cause less drag, so less energy will be needed to move the vehicle. Such a design is called aerodynamically efficient. When an object produces turbulent air flow, more energy is required to push it forward. Increased drag makes it more difficult for a low-power engine to propel a car.

2. Means of reducing rolling resistance - A low-power vehicle requires low weight because the greater its weight, the more drag from the wheels.

3. Weight - For the effects of aerodynamic drag to be observable, model cars should weigh no less than 50 grams and no more than 200 grams.

4. Methods of reducing drag - Streamlining reduces turbulent air flow, downstream and upstream. Air flowing upstream which is highly turbulent is known as separated flow. This is reduced by designing a vehicle with a rounded front end, a small, smooth profile, and small cross-sectional area.

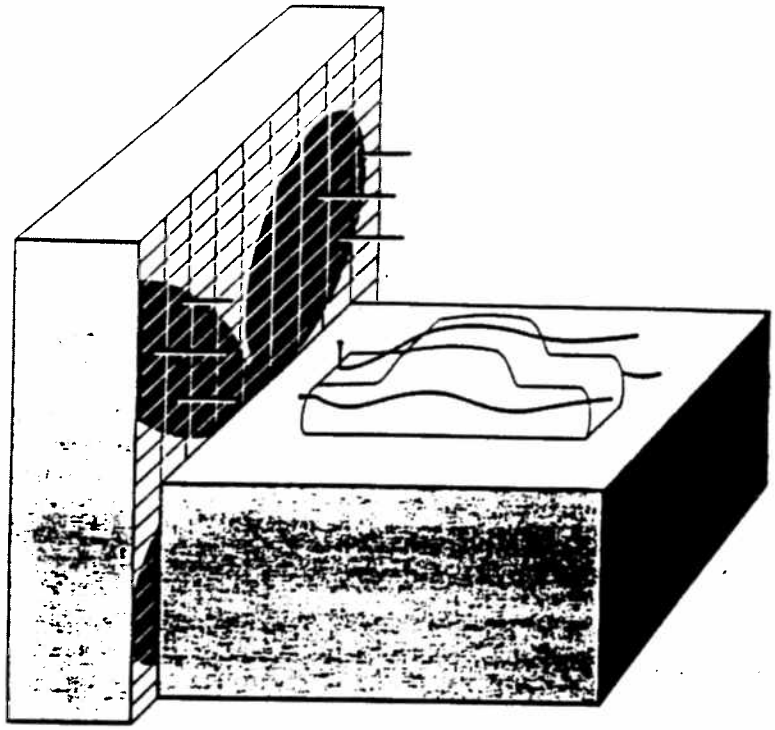

Testing Device for Zero-Drag Racing Activity

In an efficient design, the strings will float along the surface of the car. In a less effective design, they will flap.

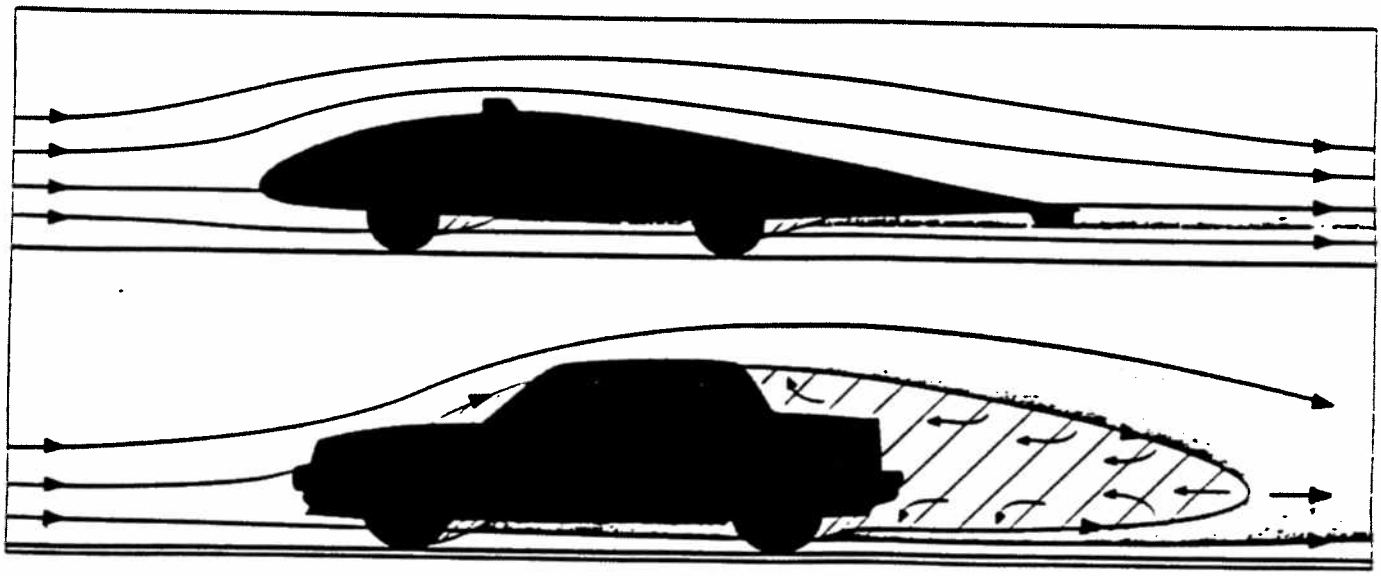

Airflow Over the GM SUNRAYCER and Over a Modern Conventional Automobile

Shaded areas indicate turbulent air that has been slowed but is still flowing downstream. Diagonal lines indicate highly turbulent air flowing upstream, known as **separated flow**. The SUNRAYCER had only small areas of this behind the wheels.

VI. PROJECT OVERVIEW AND PROCEDURES IN BRIEF

A. PROBLEM DEFINITION

1. Classroom activities involving discussions on our dependence on fossil fuels.

2. Data graphing and mathematical analysis of oil reserves and future availability of fossil fuels for transportation purposes.

3. Alternate energy approaches discussed and researched to provide a means to design and explore.

B. STUDENT ACTIVITIES

1. SOLAR CELLS MEASUREMENT (Week 1, Day 3)
Obtain a solar cell (Radio Shack #276-113 or equivalent - see Section IX.E). Have the students graph its output in relation to intensity of light input.

The input may be measured using a light meter or a controlled lighting source. The output of the solar cell may be measured using a volt-ohm-millimeter set to any small current range.

Plot a few points and extrapolate a linear curve to determine the approximate number of cells to power the car's motor.

2. ELECTRIC MOTOR MEASUREMENT (Week 1, Day 4)

Obtain a small electric motor (Radio Shack #273-223 or equivalent - see Section IX.E). Have the students graph its output speed in relation to its current input.

The speed may be measured using the Fischertechnik light sensor arrangement (used to determine the presence of a ping pong ball — see Machine Automation Case Study in Principles of Engineering) and a small propeller (cardboard or wood) connected to the motor's shaft. By using an oscilloscope (or computer program) to count the number of pulses of the light beam being cut by the propeller, the speed of the motor may be determined.

The speed (revolutions per second) is determined using EVERY OTHER pulse as every pulse represents a half revolution. For additional circuit information, see Section IX, A.8.

3. ANALYSIS OF ROLLING-RESISTANCE TEST (Week 2, Day 8)

Obtain a spring scale (Physics Department) and connect one end to the body of the racer. To the other end of the spring scale connect a light string. Either pull the string (at a constant rate) or wind the string using a drill with a wide bobbin (again, at a constant rate), pulling slowly and smoothly, and record the rolling resistance of the car.

4. ANALYSIS OF DESIGN (Week 4, Days 18 and 19)

Use the Physical Motion Calculators to simulate the effects of drag and friction on the racer's performance.

Redesign and simulate the new design changes as above.

Show how frontal area affects drag.

5. ANALYSIS OF EFFICIENCY/ENDURANCE TESTING (Week 5, Day 25)

Develop a "treadmill" for testing the performance of the solar racer. The treadmill should be partially enclosed in a box to eliminate outside lighting interference. A fixed lighting source inside the box should provide the ONLY lighting for the solar racer.

Measure the number of turns per second of the treadmill with the box light on and with the box light off.

6. ANALYSIS OF COMPETITION TESTING (Week 6, Day 29)

Develop a straight line course (gymnasium floor or hallway) to allow for team competition racing.

Measure the speed of the car over a given distance in light and (if possible) in partial darkness, such as a poorly lit hallway.

C. COMMUNICATION SKILLS

1. Person To Person

a. Joint research and development of a solar racer design.
b. Joint analysis of design data and application of the analysis on design improvements.

2. Person To Group

   a. Persons within each team devise methods of improving original design through research and development.
   b. Each team member reports to the team as a whole.

3. Person To Machine

   a. Use of computer program to determine effects of drag and friction on solar racer.
   b. Additional program software to determine improvements on energy conversion, motor output, and energy storage capability.

D. TECHNICAL TOOLS, TECHNIQUES, AND RESOURCES

1. Computer programs for data analysis.
2. CAD program for design of solar racer.
3. Machine and hand tools used in the construction of model solar racers and testing devices.
4. Research materials on solar power conversion, electrical storage devices, electrical controls, friction, and drag losses.

E. SELECTION OF MATERIALS AND PROCESSES

Team members within each group or team research various materials and processes to be used in the construction of the solar racer, paying particular attention to mass and ease of machining.

F. MEASUREMENT

1. Measurement of forces acting on the racer - friction, drag, and vehicle weight.
2. Measurement of actual available current - light conversion into electric current.
3. Measurement of speed and distance with available lighting.
4. Measurement of speed and distance without light - storage battery life.

VII. SUGGESTED EVALUATION METHODS

A. UNDERSTANDING AND APPLICATION OF THEORY TO THE PROTOTYPE

1. Preliminary problems regarding free-body diagrams. (10%)
2. Sketches and drawings (CAD) of prototype. (20%)
3. Justification and evidence of research for chosen design type. (15%)
4. Evidence of prototype testing and application of theory using measured values. (20%)
5. Construction of working prototype and final racer. (35%)

B. FINAL ANALYSIS AND DESIGN CRITERIA

1. Report of design trade-offs and reasons for deciding on final design outcome.
2. Re-testing and modification of prototype to create final design.
3. Final working drawings using CAD.
4. Formal presentation to entire class by team members.
5. Completed log/journal showing entire evolution of solar racer design.

VIII. CASE STUDY TIME TABLE

WEEK 1 - INTRODUCTION TO SOLAR RACER CASE STUDY AND CIRCUIT BASICS

Day 1: Explanation of design problem, focus, and goals. Divide class into design teams of three or four (maximum).

Day 2: Review circuit basics - Ohm's and Watt's laws.

Day 3: Solar to electricity conversion. Focus on need to measure output of solar cells.

Day 4: Electrical control concepts and electrical drive motor systems. Focus on measuring motor energy usage and measurements involving speed.

Day 5: Students develop a means to set up preliminary cell, motor, and control circuitry. Preliminary measurements taken and curves drawn up to optimize initial design ideas.

WEEK 2 - MEASUREMENT AND ITS USE IN OPTIMIZING THE SOLAR RACER

Day 6: Use examples from student-made measurements to help focus design direction: size of car, weight, area of solar panel.

Day 7: Begin development of mechanical measurements of the racer. Free-body diagrams:
1. steady state - weight and normal forces
2. center of gravity - explain purpose

Day 8: Development of steady speed vehicle free-body diagram including:
1. drag
2. rolling resistance
3. tractive force
4. lift

Discussion should include purpose of analysis and a means to minimize destructive forces and maximize performance.

Day 9: Finalize study of component forces. Identify and define forces developed on Day 8. Additional information may include coefficients of friction - static (μS) and kinetic (μK).

Day 10: Sample problems based upon free-body diagram analysis.

WEEK 3 - PRELIMINARY IDEAS AND DEVELOPMENT OF INITIAL PROTOTYPE

Days 11 & 12: Begin preliminary design ideas using sketches and rough CAD work. Brainstorming of possible electrical systems to be incorporated into racer design.

Days 13 -15: Develop ideas from sketches and CAD to actual working wooden or plastic prototypes.

WEEK 4 - TESTING OF PROTOTYPE

Days 16 & 17: Testing processes - rolling resistance, drive system, and control circuitry. Compare and contrast with original paper design concepts.

Days 18 & 19: Coast-down test of cars to further determine drag and effects of surface and air forces acting on racer. See Reference B.8.

Day 20: General discussion of this week's collected data - a review of free-body diagram algebra for racer and direct application of student data to the free-body diagrams discussed.

WEEK 5 - MODIFICATION TO SOLAR RACER PROTOTYPE AND DEVELOPMENT OF FINAL RACER FOR COMPETITION

Days 21 & 22: Team brainstorming on optimizing racer design - minimizing mass, increasing speed, minimizing opposing forces.

Days 23 & 24: Modifications to CAD drawings and reworking of prototype models. Retesting to determine outcomes of redesign.

Day 25: Efficiency testing of cars using enclosed treadmill device box.

WEEK 6 - FINAL TESTING AND COMPETITION AND CASE STUDY WRAP UP

Days 26 & 27: Formal presentation by each team to the class. Include handouts of testing data with prediction of performance outcomes.

Day 28: Students' final work session to "fine-tune" racer.

Day 29: Racing competition in light/dark transitional environment. Use a gymnasium floor or hallway. Course set to be straight line using fishing line and small eyelets.

Day 30: Review of solar racer case study.

IX. RESOURCES FOR STUDENTS AND TEACHERS

A. Instruction Sheets

1. Basic Circuit for Recharging NICAD Batteries
2. Electric Motors
3. Speed and Power
4. Energy and Range
5. Solar Energy
6. Solar Cells
7. Speed Sensing
8. Batteries
9. Solar-Electric Power System

B. Books

C. Videotapes and Software

D. Computer Program (Calculators)

E. Equipment and Materials

Instruction Sheet 1

Basic Circuit for Recharging NICAD Batteries

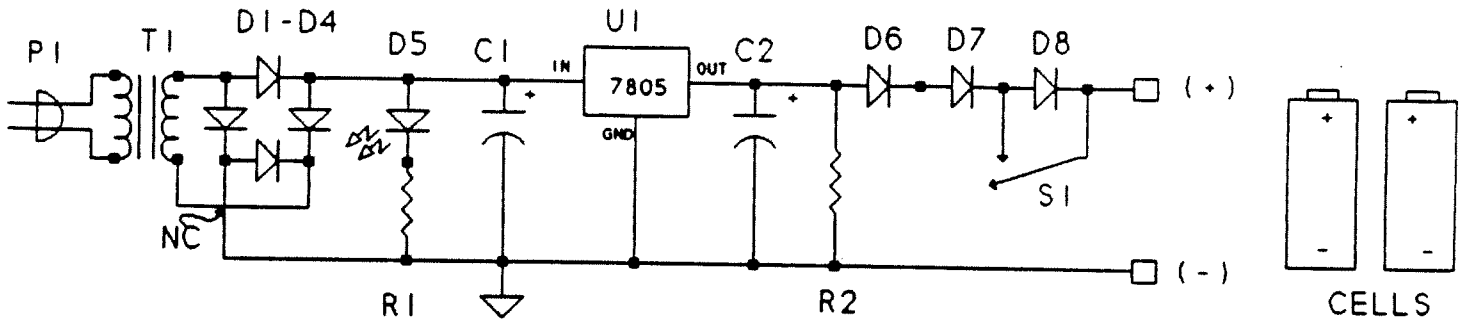

Basic Recharging Circuit

a) Parts Listing and Purpose

P1.....Standard 125 V plug and 18 AWG lamp cord for connection to T1 and wall outlet.

T1.....6.3 VAC/3 A step-down transformer which lowers the incoming line voltage from 125 V to 6.3 V.

D1-D4....50 PIV / 3 A diodes. These form a full-wave bridge that changes the 6.3 VAC output of T1 to rectified DC voltage (approximately 9 Vdc with the addition of C1)

D5.....General Purpose Light Emitting Diode (LED). This device lights up when current passes through it. It is used here merely as an "ON" indicator.

R1.....470 Ω ½ Watt resistor (YE, VI, BR, GO). his device limits the current through the LED (D5) to about 15 mA (milliamperes).

C1.....47 μF 35 Vdc electrolytic capacitor. This device will "smooth" out the rectified waveform received from the four diodes.

U1.....μA7805 5 V / 1 A voltage regulator integrated circuit (IC). As long as the input (wire from the top of C1) is between 5 V and 35 V, the output (top of C2) will remain fixed at 5 V. This is used to maintain a constant output voltage independent of loading.

C2.....4.7 μF 35 Vdc electrolytic capacitor. This helps to stabilize the output in the event of any output fluctuations.

R2.....1000 Ω ½ Watt resistor (BR, BK, RD, GO). This "bleeder" resistor allows the energy stored in C2 to dissipate when the circuit is disconnected.

D6-D8....50 PIV / 3 A diodes. These three diodes are used to lower the output to about 2.9 - 2.0 Vdc when connected to a "AA-size" or "AAA-size" NICAD cell.

S1.....SPST (Single Pole Single Throw) switch. The switch is used to "LOAD" switch and is optional. With the switch in the "OFF" position (shown), the three diodes D6-D8 are connected. Turning this switch "OFF" shorts out diode D8 which increases the output voltage slightly.

b) Circuit Parts Listing with Cost: Prices are from Radio Shack Catalog - #459, 1991.

Reference	Part Number	Page	Cost Each	Total
P1.....	61-2702	141	2/$ 1.39	$ 1.39
T1.....*	273-1511	133	$ 8.99	$ 8.99
D1-D8.....	276-1141	124	2/$ .99	$ 3.96
D5.....	276-041	123	2/$ .69	$ .69
R1.....	271-019	128	2/$ .25	$ .25
R2.....	271-023	128	2/$ .25	$ .25
C1.....	272-1015	129	$ .69	$ .69
C2.....	272-1012	129	$ .49	$ .49
U1.....	276-1770	124	$ 1.19	$ 1.19
S1.....	275-401	132	2/$ 1.19	$ 1.19
			Grand Total:	**$19.09**

*NOTE: T1 is actually a 12.6 VAC transformer with a center tap (CT) rated for 3 amperes. By using only the center tap and one outside lead on the secondary, the output is reduced to 6.3 VAC.

c) Possible Substitutions:

1. T1 could be an actual 6.3 VAC transformer available through other sources such as Mouser Electronics, MCM Electronics, etc. If you already have a 12.6 VAC transformer and it does NOT have a center tap, be sure to increase the value of R1 to 1000, Ω ½ watt. Otherwise, the LED will burn out.

2. D1-D4 could be replaced with a single Full-Wave Bridge Rectifier IC such as Radio Shack # 276-1146 ($1.39).

3. D5 can be eliminated completely if you have no need for a circuit "ON" indicator.

d) Additional Circuit Information:

1. The connections between P1 and T1 must be made very securely and completely wrapped with electrical tape to avoid any possibility of electrical shock. You may wish to solder all connections and seal them using heat-shrink tubing.

2. The entire circuit can be built and mounted on a single solderless IC breadboard [Radio Shack # 276-175 ($7.49)] with the exceptions of the transformer, plug, and NICAD cells.

3. The capacitors used in this circuit are electrolytic. They possess a polarity that must be observed. In the schematic given, the top connection is the positive side of the capacitor (usually indicated with a (+) symbol or a dent in the capacitor's casing). Connecting these incorrectly may cause injury or damage to the part.

4. The μA7805 IC will get hot if taxed a great deal. You may decide to add a heat sink [Radio Shack # 276-1363 ($ .79)] to help it dissipate the heat while operating.

5. Depending upon the cell energy source chosen for the solar racer, you will have to choose a means of connecting the cell(s) to the circuit. Radio Shack has a wide assortment of cell holders to choose from (Page 139) ranging in price from $ .79 to $ 1.59.

6. A final note: It is assumed that the instructor knows enough about electronic circuits to build this charger from the schematic given and can "fill in the gaps" where instructions on its completion are missing.

Instruction Sheet 2

Electric Motors

An electric motor is a device that converts electric energy into mechanical energy. The interaction that causes this conversion to take place is as follows: When an electric current is flowing in a wire which is also in a magnetic field, the wire experiences a force. The mechanism of the motor is arranged in such a way that this force causes rotation of the shaft of the motor. This rotating shaft can then be used to perform mechanical work, such as driving a model solar-electric car.

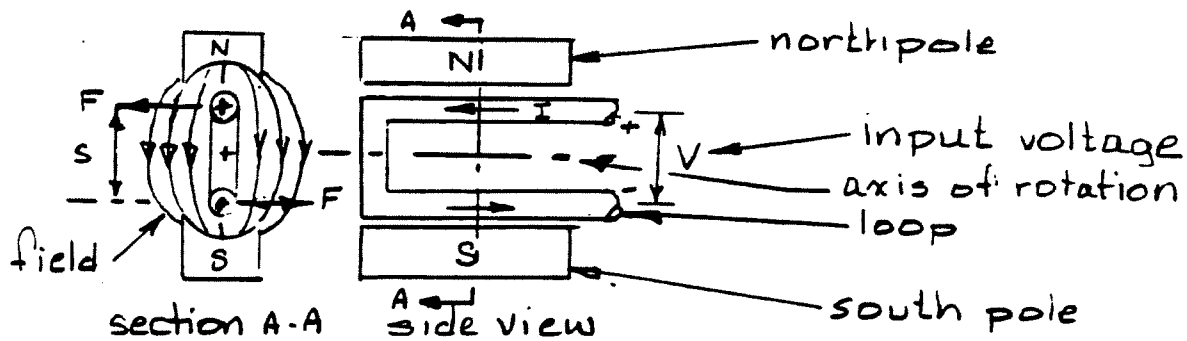

Figure 1

Figure 1 shows an elecric motor. A loop of wire connected to a source of DC current (a battery in this case) is held inside the field set up by the north and south poles of a magnet (only the magnet's poles are shown). The force on the wire is exerted sideways -- left or right, depending on the direction of the current relative to the direction of the field. The torque is the total moment (force times distance) of the two forces, "F," on the top and bottom parts of the wire,

$$\tau = F\ s \quad \text{(N-m)} \qquad (2\text{-}1)$$

where τ is the torque and s is the spacing between the center lines of the sides of the wire loop. The size of F, and therefore of τ, depends on the strength of the magnetic field and the magnitude of the electric current. For a given magnet, the torque is directly proportional to the current.

$$\tau = k\ I \quad \text{(N-m)} \qquad (2\text{-}2)$$

where k is a proportionality constant and I is the current (A).

If the motor is rotating at N rev/sec, each force will travel in a circle a distance $c = \pi s$ (π is 3.1416, approximately) every revolution. Thus each force will do work (force moving through a distance) of

$$W = \bar{F}\ C \quad \text{(N-m)}. \qquad (2\text{-}3)$$

where $\bar{F}$ is the average force during one revolution. For the one-magnet motor, the force is largest for the position of the loop shown, and nearly zero when the loop has rotated 90° from that position.

At the 90° position, a mechanical arrangement called a "commutator" switches the positive voltage to the lower side and the negative voltage to the upper side so the direction of current flow will be the same as shown in Figure 1 whichever side is lower, or upper. This prevents the forces from reversing direction and stopping the rotation.

The rate at which the work is done is called the "power." The power produced by the motor would be the sum of the rate at which each force does its work. This rate is the work per revolution times the number of revolutions per second.

$$P_M = 2\ W\ N = 2\ \bar{F}\ C\ N = 2\pi N\ \bar{\tau}\ (W), \qquad (2\text{-}4)$$

where P_M is the power of the motor and $\bar{\tau}$ is the average torque per revolution. (In motors that have several pairs of poles, the torque would be more uniform during a revolution than for the two-pole motor shown.)

Figure 2 shows the electric circuit of the motor. The loop of wire, which is called the "armature," has some electrical resistance, R_A. The battery, or array, supplies the voltage, V, which drives the current, I, through the armature and makes it rotate. The little battery labeled "V_C" represents the "counter electromotive force" (counter emf).

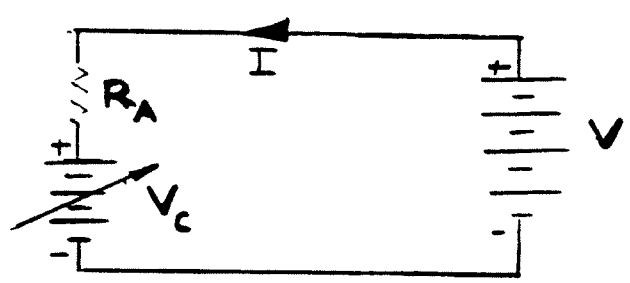

Figure 2

Because the wire rotates in the magnetic field, the field creates, or "induces," a voltage in the wire that tries to cause current to flow in the wire <u>opposite</u> to the current, making the wire rotate. For a given magnet, the counter emf is proportional to the rotational speed. Thus the faster the motor rotates, the higher V_C is, and the higher the battery, or solar cell array, voltage must be to make it go.

$$V = I\ R_A + V_C. \qquad (2\text{-}5)$$

The electrical power supplied to the motor is

$$P_E = I\ V\ (W) = I^2R_A + I\ V_C. \qquad (2\text{-}6)$$

The efficiency of the motor is the output power divided by the input power,

$$\eta_M = 100P_M/P_E\ (\%), \qquad (2\text{-}7)$$

where η_M is the motor's efficiency. This is a number less than 100% because of the losses in the armature resistance, the mechanical friction in the bearings of the motor, and the air friction opposing the rotation of the armature. Good motors have efficiencies around 90%.

The efficiency is higher at high N because I is lower and losses in R_A are smaller, but the torque, which is proportional to I, is also smaller, if V is the same. Increasing V to increase the torque means increasing the size of the armature conductors so they will have smaller resistance and the efficiency will not decrease. This increases the size and weight of the motor. Hence lightweight motors tend to operate at high rotational speed, but have low torque. Motor designers look for magnet materials that have stronger fields. These materials would allow higher torque at higher speeds without increasing the current.

Instruction Sheet 3

Speed and Power

The calculations that follow use the Physical Motion Calculators on the program disk.

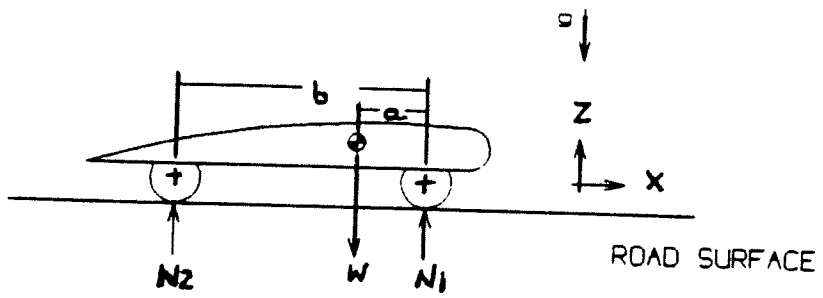

Figure 1. Free-Body Stationary Vehicle

Stationary Vehicle. Figure 1 shows a solar-electric car at rest on a horizontal road in still air. The wheel base is b meters long and the center of gravity is a meters from the axis of rotation of the front wheels. The weight, W, acts down from the center of gravity. N_1 and N_2 are the total reactions of the road on the front and rear wheels, respectively.

The wheel reactions can be found from mechanical equilibrium:

$$N_1 = \left(1 - \frac{a}{b} \right) W \qquad (3\text{-}1)$$

$$N_2 = \frac{a}{b} W \qquad (3\text{-}2)$$

Example 1

A solar-electric racing car has a wheelbase of 3.5m and its center of gravity is 1.5m behind the axis of rotation of the front wheels. If the mass of the car is 260 kg, what are the front and rear wheel reactions?

$$W = Mg = (260 \text{ kg})(9.8 \frac{\text{m}}{\text{s}^2}) = 2548 \text{ N}$$

$$N_1 = \left(1 - \frac{1.5}{3.5} \right)(2548 \text{ N}) = 1456 \text{ N}$$

$$N_2 = \left(\frac{1.5}{3.5} \right)(2548 \text{ N}) = 1092 \text{ N}$$

Example 2

A solar-electric car was weighed using scales under the wheels. The results were N_1 = 1200 N and N_2 = 1000 N. What is the location of the center of gravity on the longitudinal axis of the car if the wheelbase is 4.0 m long?

$$\frac{a}{b} = \frac{N_2}{W} = \frac{1000}{2200} = 0.4545$$

$$a = (4\ \text{m})(0.4545) = 1.82\ \text{m}$$

Remark

The location of the center of gravity affects the crosswind stability and steering characteristics of the car.

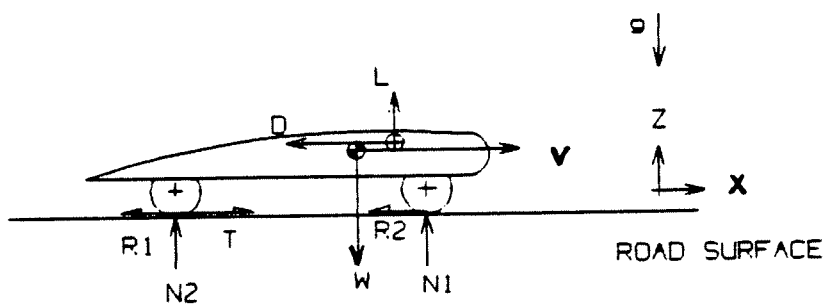

Figure 2. Steady Speed in Still Air

Figure 2 shows the car traveling at a steady speed v on a horizontal road in still air. Four more forces now are acting on the car: the drag, D, the rolling resistance, R(=R1+R2), the tractive force, T, and the lift force, L.

Drag. The drag force is the force of the air on the car that opposes its motion. It is the sum of the viscous frictional force on the surface of the car and the component of the non-uniform pressure distribution over the surface area of the car that opposes the motion.

The air at the surface of the car is at zero speed relative to the car, while the air far from the car is still. The result is a viscous shear force distributed over the car's surface.

The airflow may be thought of as flowing along "stream surfaces" which, near the car, conform to the shape of the car. The flow is said to be "attached" to the car. However, if the slope of the car's surface becomes too steep, the flow cannot conform to it. The stream surfaces break away and the flow is said to "separate" from the surface.

Downstream from the line of separation, pressure drops and backflow occurs. Large eddies form and trail behind the car, becoming a wake.

Upstream from the line of separation the pressure generally decreases as the front of the car is approached*, reaches a minimum at the point of maximum velocity (top of car), and then reaches a maximum at the point where the flow velocity is zero relative to the car. This is called the "stagnation point."

Figure 3 shows a two-dimensional picture of the flow relative to the car.

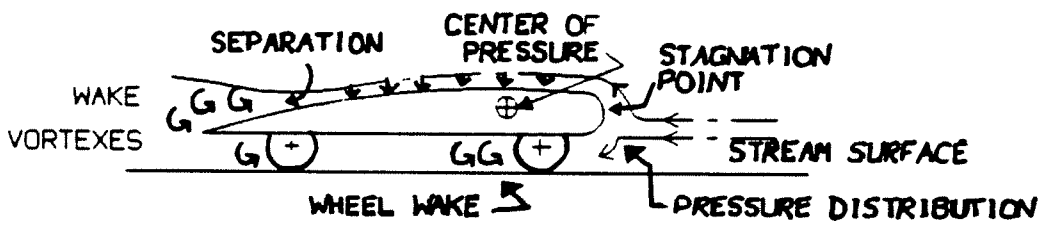

Figure 3. Separated Flow

Separation causes a drag force because there is a net pressure force that opposes the car's motion. Streamlined car shapes, such as that shown in Figure 3, delay separation and thus improve pressure recovery and reduce drag.

The pressure distribution may also cause a distributed lift force. The center of pressure shown in Figure 3 is the point at which the distributed lift and drag forces appear to act. That is, if an isolated lift force, L, and an isolated drag force, D, were to replace the actual distributed forces, they would have to act at this point to have the same moment about the center of gravity (or some other point) as the actual distributed forces do.

The drag force is customarily expressed as

$$D = C_D A_D \rho \frac{(v_R)^2}{2} \qquad (3\text{-}3)$$

* The details of the distribution are shape-dependent.

where C_D is the drag coefficient, A_D is the profile area (m^2) (although other reference areas are sometimes used), ρ is the ambient air density (kg/m^3), and v_R is the speed of the ambient air relative to the car (m/s). Thus if there is no wind velocity component in the direction of motion, $v_R = v$.

C_D tends to be independent of v_R at speeds for which drag is important because drag is dominated by separation. Hence C_D will be taken as a constant for purposes of design and simulation.

The lift force, which should be small compared to the weight, will be neglected.

Rolling Resistance. Rolling resistance is the sum of the static frictional forces (that is, the tires are assumed not to slip) between the tires and the road, and a force applied at each of these points that has the same torque about the wheel axis as the frictional torques in the bearings when the gears are in neutral. A successful model for the rolling resistance is

$$R = \mu_1 N + \mu_2 vW \qquad (3\text{-}4)$$

where μ_1 is a dimensionless static friction coefficient (characteristic of the road surface, the tire surface, the tire diameter, and the tire pressure), N is the component of the weight normal to the road, μ_2 is a kinetic friction coefficient (sec/meter), and W is the weight. The two coefficients may be measured for a given car and road by a coast-down test. Table 1 gives typical values (from Reference B.12).

μ_2 $\frac{h}{km}$	$3.11\ (10^{-5}) - 1.09\ (10^{-3})$	
μ_1	smooth pavement	unpaved
	$7.5\ (10^{-3})$	0.3

Table 1. Rolling Resistance Coefficients

Tractive Force. This is the force (T) which, viewed as applied at the tire's contact area, has the same torque about the wheel's axis as the driving torque from the motor. If r is a wheel's radius (flattening of the tire neglected)

$$\tau_w = Tr \qquad (3\text{-}5)$$

At steady speed, T is equal to the sum of all opposing forces,

$$T = R + D \qquad (3\text{-}6)$$

Tractive Power. This is the rate at which the tractive force does work on the car. It is

$$P_w = Tv, \qquad (3\text{-}7)$$

where P_w is the power <u>delivered</u> to the driven wheel, or wheels (W), not the power generated by the motor. Note that the drag power increases with v^3 and the rolling resistance power, (Rv) with v^2.

<u>Hills</u>. Figure 4 shows a solar-electric car climbing a hill at steady speed. The hill makes an angle of α with the horizontal.

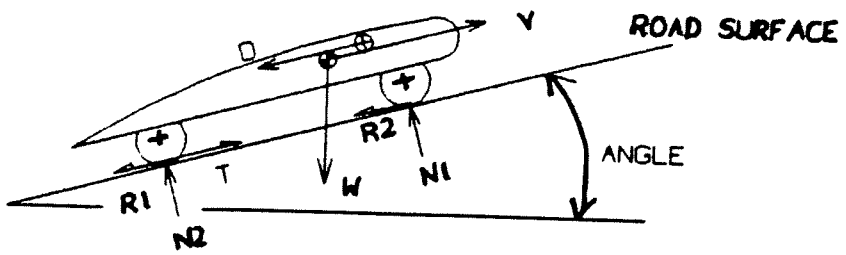

Figure 4. Solar Car Climbing a Hill

Equation (3-6) now becomes

$$T = R + D + W \sin\alpha \qquad (3\text{-}8)$$

<u>Wind</u>. If there is a component of the wind blowing in the direction of motion, then

$$V_R = v - w \qquad (3\text{-}9)$$

where w is the wind component, taken positive if it is in the same direction as v.

<u>Speed</u>. Using equations (3-3), (3-4) and (3-9) in equation (3-8), and then solving for v gives the result shown graphically in Figure 5. Figure 5 is a plot of

$$P_w^* = \frac{P_w}{Wv_D} \text{ and } T^* \text{ vs. } v$$

The variables in Figure 5 have been non-dimensionalized to make the figure more general. The "drag speed" is the speed the car would attain in stable, nose-first, free fall through still air of uniform density ρ.

It is

$$V_D = \sqrt{\frac{2W}{C_D A_D \rho}} \qquad (3\text{-}10)$$

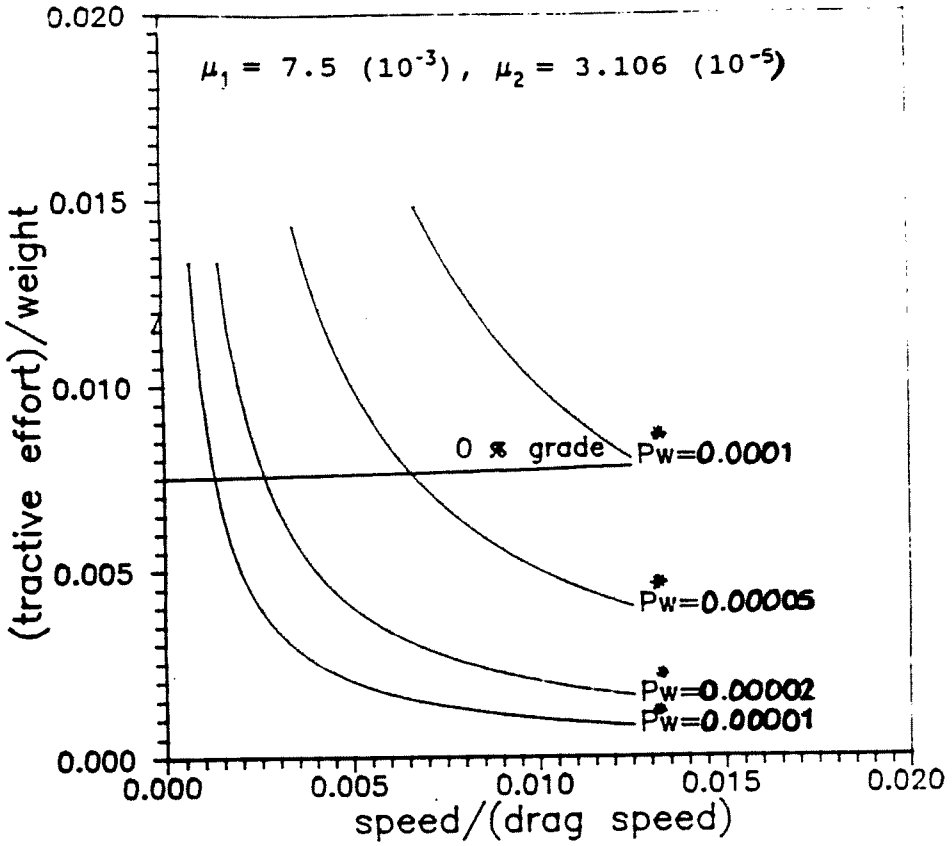

Figure 5. Tractive Force/Weight vs. Speed/Drag Speed

<u>Example 3</u>

A solar-electric car has a mass of 200g (0.2 kg) and a design speed of 1.0m/s under the conditions of

$$\mu_1 = 7.5\ (10^{-3}),\ \mu_2 = 3.106\ (10^{-5})\ \frac{k}{km} = 1.1$$

$$(10^{-4})\ (s/m)\rho = 1.0\ \frac{kg}{m^3}\quad w=0,\ \text{and}\ \alpha = 0.$$

(1) If v_D = 200 m/s, what tractive force and P_w are required?

$W = (0.2\ kg)\ (9.8\ m/s^2) = 1.96\ N$

$$V^* = \frac{1.0\ m/s}{200\ m/s} = 0.005$$

$T^* = 0.0076$ (Fig.5)

$T \approx (0.0076) = 0.015$

$P_w^* = 0.00004$ (Fig.5)

$P_w \approx (0.00004)\ (200\ \frac{m}{S})\ (1.96N) = .0157W = 15.7mW$

(2) If $C_D = 0.1$, what is A_D?

$$C_D A_D = \frac{2W}{\rho v_D^2} = \frac{(2)(1.96\ N)}{(1.0\ kg/m^3)(200\ m/s)^2} = 0.000098\ m^2 = 0.98\ cm^2$$

$$A_D = \frac{0.98 cm^2}{0.1} = 9.8\ cm^2$$

(3) Suppose the efficiency of power transmission is $\eta_D = 0.95$. What motor output power is required?

$$P_{MO} = P_W / \eta_D = \frac{15.7mW}{0.95} = 16.5\ mW$$

(4) Suppose the motor efficiency (including controller) is $\eta_M = 0.9$, the efficiency of the solar array in converting sunlight to electrical power is $\eta_s = 0.5$, and the irradiance is 300 (W/m^2) (perhaps we are indoors). What size array is required?

$$P_{MI} = \frac{16.5mW}{0.9} = 18.3\ mW$$

$$A_s = \frac{P_{MI}}{\eta_s G_s} = \frac{0.0183W}{(0.5)(300\ W/m^2)} = 0.00122\ m^2 = 12.2\ cm^2$$

The Physical Motion Calculators can be used to solve these problems for any combination of parameters.

<u>Linear Acceleration</u>. If the car is accelerating in a straight line while on a grade

$$T = M_e v + R + D + W \sin \qquad (3\text{-}11)$$

and

$$P_W = Mv\dot{v} + (R + D + W \sin\alpha)v. \qquad (3\text{-}12)$$

where $\dot{v}$ is the rate of acceleration in m/s^2 and M_e is the effective mass. M_e is greater than the vehicle mass, M, by an amount needed to account for the rotational inertia of the wheels.

Equations (3-11) and (3-12) express the tractive effort and wheel power increases required to accelerate. Note also that these increases are proportional to the vehicle's effective mass.

Instruction Sheet 4

Energy and Range

Range is the distance a car can go without refueling. For a solar-electric car, "refueling" means stopping to recharge its batteries. This may be done from the sun or from the electric utility grid.

The range depends upon the energy available from the sun and the energy required to go a given distance. To compare these properly, they must be found for the same point in the car's energy conversion system. This point could be, say, at the motor input terminals. But it is convenient to refer the energy available and the energy required to the input of the driven wheel, in order to make use of the discussion in the previous information sheet. So, "wheel energy" will mean the energy required at the driven wheel to go a specified distance, just as "wheel power" meant the power required at the driven wheel to go a certain speed.

If an average tractive force, T, must be applied to the car for it to go a distance S at a speed v, then the work done at the driven wheel is

$$W_W = T\ S. \qquad (4\text{-}1)$$

Energy is expended when work is done. So the energy expended to go the distance S is equal to the work done.

$$\Delta E_W = W_W, \qquad (4\text{-}2)$$

where the Δ means a change in energy. For example, in a gasoline car, the energy stored (as fuel) in the tank would be reduced by this amount. So, if ΔE_W of energy is <u>available</u> at the driven wheel, the range will be

$$S = \Delta E_W/T.$$

Power is the rate of doing work, so it is also the rate at which energy is expended. This means that Figure 5 of the Power and Speed instruction sheet can be used to find the energy needed to go a distance S. In order to use this figure, we will have to assume that the speed is constant over S. For design purposes, this is acceptable. Example 1 shows how to do this.

<u>Example 1</u>

Suppose we use the model car and conditions that were assumed for Example 3 of the Power and Speed instruction sheet. How much energy must be delivered to the driving wheel to travel 100 m at 1.0 m/s?

The tractive force obtained from Figure 5 for this speed was 0.015 N. The energy is therefore

$$\Delta E_W = T\ S = (0.015N)\ (100m) = 1.5\ N\text{-}m = 1.5\ J.$$

From Example 3 of the previous sheet we know that this energy was delivered at a rate of $P_W = 0.015$ W, or 0.015 J/s. The time, Δt, required to travel 100 m at 1.0 m/s is 100 s. So we are not surprised to learn that the energy expended is also equal to $P_W \Delta t$.

We would still like to know if there is enough energy available to supply ΔE_W to the driven wheel. The electric power system of the car is discussed briefly in Instruction Sheet 9. The system first converts radiant energy into electrical energy in the solar array, then the electrical energy is converted into mechanical energy in the motor, and finally the mechanical energy is transmitted to the driven wheel. In each of these three stages there is a loss, and the largest loss is in the solar array. To estimate the solar energy available at the driven wheel, we must guess at the fraction of it that remains after each stage of conversion. This fraction is the efficiency of each stage.

<u>Example 2</u>

Suppose, as before, the solar array has an efficiency of 0.05, the motor an efficiency of 0.90, and the speed reduction an efficiency of 0.95. Using the conditions of Example 3 of the previous instruction sheet, estimate the solar energy available at the driven wheel for an S of 100 m.

The gym lights give 300 W/m^2 and the array area is 12.2 cm^2. The overall efficiency to the wheel is $\eta = (0.05)(0.90)(0.95) = 0.043$. The energy is

$$E_{WS} = G_S\ A_S\ \Delta t\ \eta_C$$

$$= (300\ W/m^2)\ (12.2 \times 10^{-4}\ m^2)(100\ s)\ (0.043) = 1.57\ J.$$

Enough energy is available.

For a model solar-electric car racing over a fixed distance indoors with a constant light source, the range problem doesn't really exist. It is simply a matter of making the car go as fast as possible. However, for a solar-electric commuter car, say, the objective might be to design the car so that a round-trip commute could be carried out without recharging from the electric utility grid. The design conditions would account for the charging availability of sunlight with time, both daily and seasonally. Charging from the electric utility grid would be required when the available solar energy dropped below the design value.

Instruction Sheet 5

Solar Energy

This instruction sheet outlines the calculation of the rate at which solar energy falls upon a surface (such as a solar cell array) of some orientation, on some day of the year, at some time of that day, and at the same location on Earth. **The instruction sheet uses the two program calculators: Solar Energy and Time Calculator and Angle of Incidence Calculator.**

The energy released by the nuclear fusion reactions within the sun is broadcast in the form of electromagnetic radiation distributed over wavelengths ranging from the ultraviolet to the infrared. Earth's atmosphere truncates this radiation below about 0.3 micron (1 micrometer, or "micron," is $1/10^{-6}$ m) and above about 3.0 micron and reduces its intensity between these wavelengths. The chemicals mainly responsible for these effects are ozone (O_3) in the ultraviolet and carbon dioxide (CO_2) and water vapor (H_2O) at longer wavelengths. More detail about the distribution of this radiation over wavelength (the "spectral distribution" of solar energy) in space and at the Earth's surface may be found in textbooks on solar energy, such as Reference B.9.

The energy (Q_s) is emitted at a rate of about $3 \cdot 83 \cdot 10^{26}$ W. The intensity (W/m^2) of solar radiation at the average radius of Earth's orbit ($1 \cdot 5 \cdot 10^8$ km) is called the "solar constant" (G_{sc}).

<u>Example 1</u>

Estimate the solar constant.

The area of a sphere of radius 1.5×10^8 km is

$$A = 4\pi R^2 = (4)(3.1416)(1.5 \cdot 10^{11} m)^2 = 2 \cdot 83 \cdot 10^{23}\ m^2.$$

The radiation intensity is

$$G_{sc} = Q_s/A = 3.83 \cdot 10^{26} \cdot 2.83 \cdot 10^{23} = 1353\ W/m^2.$$

The actual intensity, G_s, may differ from the solar constant during the year mainly because Earth's orbit is slightly elliptical, with the sun at one focus. Reference B.9 gives an equation for calculating G_s for any day of the year. It is

$$G_s = G_{sc}\ [\ 1 + 0.033\cos(\ 360n/365\ )\ ], \qquad (5\text{-}1)$$

where the argument of cos is in degrees and n is the serial day of the year. This equation shows that G_s is a maximum at midnight on December 31 (n = 0), when it is 1399 W/m^2, and a minimum during June 29 (n = 182), when it is 1308 W/m^2.

We neglect the atmosphere for now and assume that the sun is point source of radiation, so that its rays are parallel. Suppose that on a certain day (n) a flat plate (of area A) is located at some latitude (L) on Earth (latitude is positive when north of the equator), is tilted at an angle (t) above the local horizontal plane, and is pointing (a) degrees west of due south (a, the surface azimuth angle, is positive when west of south). A line drawn perpendicular to the plate's surface would make an "angle of incidence" (i) with the incoming solar rays. The area of the plate intercepting solar radiation would be

$$A_p = A \cos(i). \qquad (5\text{-}2)$$

So the rate at which solar energy strikes the plate would be

$$Q = G_s A_p = G_s A \cos(i). \qquad (5\text{-}3)$$

<u>Example 2</u>

Suppose a solar cell purchased from Radio Shack is lying on flat ground at Potsdam, New York (longitude 75° W and about latitude 45°N) at noon Eastern Standard Time on June 15. The cell is 4 cm long and 2 cm wide. At what rate does the cell intercept solar energy?

From the Solar Energy and Time Calculator the solar time is approximately noon.

$A = (.02\ \text{m})(.04\ \text{m}) = 8 \cdot 10^{-4}\ \text{m}^2$.
Using the Angle of Incidence Calculator we find i = 21.6° and therefore

$$A_p = (8\text{x}10^{-4}\text{m}^2)\ \cos(21.6°) = 7.438 \cdot 10^{-4}\ \text{m}^2.$$

From equation (5-1) $G_s = 1310\ \text{W/m}^2$. The rate of energy intercept is

$$Q = G_s A_p = (1310\ \text{W/m}^2)(7.438\text{x}10^{-4}\ \text{m}^2) = 0.97\ \text{W}.$$

The sun's rays diverge from parallelism by only 16 minutes of arc, so for most purposes (including ours) they may be assumed parallel. Neglecting the atmosphere introduces a far greater error, so we will now consider the affect of the atmosphere on the calculation of the incident radiation.

Absorption of solar radiation by the atmosphere has already been mentioned. The remaining radiation is either transmitted directly ("beam" radiation) or transmitted after scattering by the gases and dust particles in the atmosphere ("diffuse" radiation). So the solar cell in Example 2 actually receives its solar energy from both of these transmission mechanisms.

The actual amount of each is impossible to predict at any moment because of weather conditions. One hour may be clear with mostly beam radiation and then the next hour may be overcast with only diffuse radiation, or some intermediate case may occur. Furthermore, the diffuse radiation may be distributed non-uniformly over the sky, as on clear days when it tends to peak near the sun.

Because we cannot know the actual solar energy conditions our design will experience, we must use average radiation values found from measurements carried out over periods long enough to establish reliable trends. The datum usually tabulated is the total (beam plus diffuse) radiant energy intensity summed for a month on a horizontal surface, divided by the number of days in the month. We will call this value ($\overline{H}$, kJ/(m^2 - day)) the "average daily horizontal radiation." The average daily horizontal radiation for each month at many locations in the United States and Canada is reported in Reference B.7 and may also be found in solar energy engineering texts, such as B.9.

<u>Example 3</u>

What is the average rate of energy reception by the solar cell in Example 2, including the effect of the atmosphere, for the average day of June?

Potsdam is not one of the locations tabulated in Reference B.7 or B.9. Massena, which is about 30 miles north of Potsdam, is the nearest tabulated location. Assuming Massena's data apply to Potsdam, we find $\overline{H}$ = 20,190 kJ/(m^2 - day).

The total energy received is

$$Q = \overline{H}\, A_p = (20{,}190 \text{ kJ/(m}^2 \text{ - day)})(7.422 \cdot 10^{-4} \text{ m}^2)$$
$$= 15.0 \text{ kJ.}$$

From the Solar Energy and Time Calculator we find the day length (N) for June 29 to be 15.37 h, or 55,332 sec. So the average rate of intercept is

$$Q = Q/N = 15.0 \text{ kJ}/55332 \text{ sec} = 2.70 \cdot 10^{-4} \text{ kW}$$
$$= 0.27 \text{ W.}$$

Equation (5-3) (and common sense) shows that the collected energy can be increased by tilting the solar cell toward the south, because this will make the angle of incidence smaller. (If the cell is moved so that i = 0 always, i.e., so that it "tracks" the sun, then the collected energy will be maximized.) If the cell is tilted, the collected energy calculation must account for the fact that it cannot now view the entire sky, so some of the diffuse radiation from the sky will not be collected, that it will also see radiation reflected from the ground in front of it, and that the

tabulated values we want to use were derived from measurements on horizontal surfaces.

We can express the ideas in the previous paragraph by writing the radiation on a tilted surface as the sum of three terms: a beam radiation contribution, a sky-diffuse contribution, and a ground-diffuse contribution.

$$\bar{H}_T = \bar{R}_B\bar{H}_B + \bar{R}_D\bar{H}_D + \bar{R}_G\bar{H} \qquad (5\text{-}4)$$

The first term is the beam radiation contribution. $\bar{R}_B$ is the monthly average beam tilt-correction factor and $\bar{H}_B$ is the beam radiation portion of $\bar{H}$. The second term is the sky-diffuse radiation contribution. $\bar{R}_D$ is the monthly average sky-diffuse tilt-correction factor and $\bar{H}_D$ is the diffuse portion of $\bar{H}$. The third term is the ground-diffuse radiation contribution. $\bar{R}_G$ is the monthly average ground-diffuse tilt correction factor; it is multiplied by $\bar{H}$ because the ground intercepts all of $\bar{H}$.

In order to arrive at estimates for $\bar{R}_B$, $\bar{R}_D$, and $\bar{R}_G$, we must model the physical situation. For this model we take a practical view. We assume that the diffuse radiation from the sky is uniform in all directions, that the ground reflects the total horizontal radiation uniformly in all directions, and that we can ignore the atmosphere when calculating $\bar{R}_B$. This model of course introduces error, as do all models. But it is satisfactory for design purposes.

In order to use equation (5-4) we must know how much of $\bar{H}$ is diffuse. The fractional amount of diffuse radiation can be related to the ratio of $\bar{H}$ to the monthly average daily total radiation computed at the same latitude and longitude and for the same month, but just outside the Earth's atmosphere. This ratio, the "monthly average clearness index" ($\bar{K}_T$), is tabulated each month with $\bar{H}$ in Reference B.7 and in texts such as B.9. Finally, it is often of interest to estimate the total, beam, and diffuse components of radiation for each hour of the average day of the month. A method of doing this was initially developed by B. Y. H. Liu and R.C. Jordan (B.10) and further developed by M. Collares-Pereira and A. Rabl (B.11). The method developed by these workers is also presented in B.9.

The forgoing information has been incorporated in the Solar Energy and Time Calculator.

Example 4

Suppose that the solar cell of Example 3 has been tilted 5° above the local horizontal and turned so that it points due south. The other conditions remain the same. Calculate the average rate of solar energy interception by the cell during the hour centered on noon, Eastern Standard Time. Assume the ground reflectivity is 0.2.

From Reference B.7 or B.9 we find $K_T = 0.481$, L = 44° 56′ N, and Lo = 74° 51′ W for Massena. (H_B, H_D, H have been replaced by I_B, I_D, and I to distinguish hourly from monthly average values.) Enter the Solar Energy and Time Calculator and find:

$I_B = 1437$ kJ/m_2; $I_D = 844$ kJ/m^2; $I = 2281$ kJ/m^2.

$R_B = 1.051$; $R_D = 1.0$ (approx.); $R_G = 0$ (approx).

So that the energy intercepted is

$I_T = (10.51)(1437) + (1.0)(844) + (0.0)(2281) = 2353$ kJ/m^2.

The average rate of intercept is therefore

$Q = (2.353 \cdot 106\ J)(7.437 \cdot 10^{-4}\ m^2)/(3600\ sec) = 0.32\ W$

Compare this value with the results of Examples 2 and 3.

Consider a solar-electric car traveling north on a horizontal road in the vicinity of Massena, New York, on the average June day. The car's array is shaped like an inverted, rectangular "U." The east and west sides are vertical with respect to the car and are 4 m long by 1 m high. The center portion is horizontal with respect to the car and is 4 m long by 2 m wide. The array is made of several hundred of the 4 cm x 2 cm Radio Shack solar cells connect in one of the ways to be discussed in Instruction Sheet 6.

To estimate the energy intercepted by the array during each hour of the day, sunrise to sunset, the procedure for Example 4 would be carried out for each segment of the array at the midpoint of each hour, using the programs provided. The results for the three segments would then be summed to give the total for the car for each hour. To test their comprehension of this instruction sheet's material, the students are invited to carry out this calculation without further assistance.

Instruction Sheet 6

Solar Cells

Solar cells are thin, translucent wafers of special materials which, when exposed to sunlight and connected to a load such as a light bulb, produce a one-directional electric current (DC, or "direct current"). This is called the "photovoltaic effect" (or the "photoelectric effect"). The material most commonly used to make solar cells is silicon, which is found in beach sand.

Solar radiation may be thought of as traveling in small bits called "photons." Photons move at light speed and their energy is directly proportional to the radiation's frequency; they could be thought of as "light bullets." When a bullet strikes something, say an apple on its tree, it may have enough energy to do the work necessary to break the stem of the apple and remove it from the tree.

Suppose we think of the electrons in a silicon atom as the "apples." They are bound to the "tree," or nucleus, by a "stem" made of the electrostatic attraction between the positive nucleus and the negative electrons. If a photon with sufficient energy (high enough frequency) strikes an electron, the electron will be freed from the atom. The vacant electron orbit is called a "hole." The silicon atom then has a net positive charge equal to the magnitude of the electronic charge and is called an "ion." The positive charge may be thought of as belonging to the hole.

The free electron will wander until it finds a hole and falls in, or "recombines," becoming bound to another atom. Thus holes and free electrons appear and drift through the material, though in opposite directions. This is similar to jumping a piece in checkers, and then replacing that piece by your own piece from a location nearer to you; the vacancy, or "hole," on the board moves toward you.

What is needed is a way of separating the charges so that the electrons may be collected and forced to flow through an external circuit and do work before they return to the cell and recombine with the holes.

Charge separation is produced by placing "p-type" silicon, in which the majority of charge carriers are positively charged holes, on one side of a very thin junction region and "n-type" silicon, in which the majority of charge carriers are negatively charged free electrons, on the other. These two kinds of silicon are produced by putting specially selected impurities into the pure silicon by a process called "doping."

Holes diffuse across the junction into the n-type material because there are more holes on the p-type side than on the n- type side. For the opposite reason electrons diffuse across into the p-type material. The diffusion continues until a local net

positive charge builds up on the n-type side and a local net negative charge builds up on the p-type side. This creates an electrical potential barrier, or voltage, which opposes the diffusion of both species and eventually stops it.

Suppose the n-type material is on the illuminated side, the top. Thin metal strips called "electrodes" are bonded to the top (they have to be sparse because this is the illuminated side) and the back of the cell is completely "metallized," or covered by its electrode. Figure 1 illustrates this.

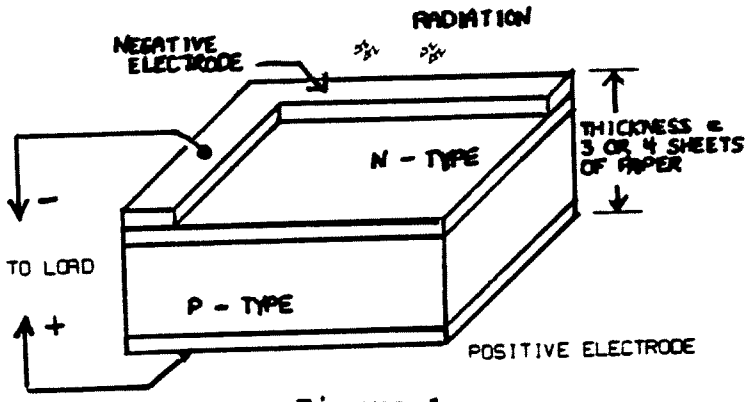

Figure 1

When the cell is illuminated, the free electrons in the p-type material are swept into the n-type material by the barrier potential and join the free electrons already on that side to flow to the top electrodes, which become negatively charged. Because the holes have positive charges, they are swept in the opposite direction by the barrier potential to the bottom electrode, which becomes positively charged. Just as in the case of the junction barrier potential, this migration continues until enough charge has been collected on the electrodes to prevent further migration (a very rapid process). Further ionizations are balanced by recombinations.

The voltage produced across the electrodes is called the "open circuit voltage" (V_{oc}) because no electrical load is connected to the cell. V_{oc} is the largest voltage that the cell can produce. This is the voltage that would be measured by a voltmeter connected to the terminals of a cell. V_{oc} is nearly independent of irradiation, but decreases slowly as the cell's temperature increases. At 25°C, V_{oc} is about 0.6 VDC for silicon.

If the positive and negative terminals of the cell are connected together, the short circuit current (I_{sc}), the largest current that the cell can produce, will flow. This current can be measured by connecting an ammeter across the terminals of the cell. I_{sc} is directly proportional to the intensity of the irradiation, or for a given irradiation it is directly proportional to the area of the cell. The proportionality constant for a unit area of a cell is called the "sensitivity" (S_{sc}, A/W).

If you purchase a cell from Radio Shack, the V_{oc} and I_{sc} for a cell temperature of 25°C and an irradiance (normal to the cell) of 1000 W/m^2 are printed on the package containing the cell.

Suppose that we connect a variable resistor, a voltmeter, and an ammeter as a cell, shown in the sketch below.

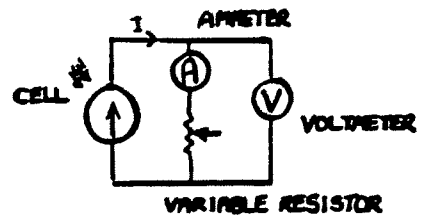

Keeping the irradiance constant, we increase the resistance from a low value to a very high value, reading the ammeter and voltmeter after each change. We then plot the measurements with the current on the vertical axis and the voltage on the horizontal axis. The resulting curve, called an I-V characteristic, is shown below.

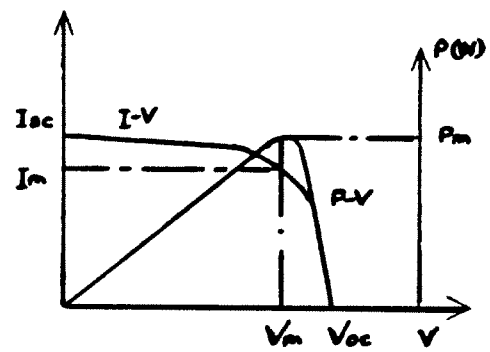

The power (P) delivered to the resistor is equal to the product of the voltage (V) and current (I); this is the rate of delivery of electrical energy to the resistor. If we plot the power as a function of voltage we get a curve similar to the power curve shown in the sketch above. It is zero at both the short circuit and open circuit points and has a maximum at the knee of the I-V characteristic at about 0.5 VDC.

When possible, the cell should be operated near the maximum power point, where the rate of conversion of the incident solar energy into electric energy is a maximum. The fraction [energy delivered over an interval]/[energy collected over the interval] is called the cell efficiency. The efficiency is a maximum at the maximum power point.

The examples which follow can be resolved using the Solar Cell Calculator.

Example 1

Our model solar car design calls for a flat array. We plan to test the car in our school's gym and so we measure the horizontal radiation near the gym floor when all the lights are on as 300 W/m^2. The solar cells available to us have I_{sc} = 0.06 A at 1000 W/m^2 and V_{oc} = 0.6 VDC at 25°C. What will I_{sc} be under the gym's lighting conditions?

I_{sc} is directly proportional to the radiation level. The gym lighting's spectral distribution is not the same as that of solar radiation, but we assume that the difference is not significant. So I_{sc} = (300/1000)(0.06) = 0.018 A is our estimate.

Suppose we measure the V_{oc} of two identical cells under the same conditions using the previously outlined method. Then we connect the positive terminal of one cell to the negative terminal of the other cell; this is called a "series" connection. Then if we connect a voltmeter between the positive terminal of the second cell and the negative terminal of the first cell we read twice the V_{oc} of a single cell. But if an ammeter is connected to measure I_{sc}, we find it to be the same as for a single cell. The voltages of cells in series add, but the current through each cell is the same.

Now we measure the I_{sc} of each cell. Then we connect the positive terminals of the cells together and the negative terminals of the cells together; this is called a "parallel" connection. Now we measure I_{sc} by connecting an ammeter between the joined positive terminals and the joined negative terminals. The meter reads twice the current of a single cell. But if V_{oc} is measured with the voltmeter it is the same as for a single cell. The currents of cells in parallel add, but the voltage across each cell is the same.

Example 2

Assume that it has been estimated, using Instruction Sheet 3 and the Speed and Power Calculator, that the small DC electric motor with which we will power our model car requires 1.5 VDC at 0.05 A (0.075W) to move the car at 1.0 m/s across the gym floor. How many of the solar cells of Example 1 will it take to power the motor?

Our approach will be first to estimate the number of cells using I_{sc} and V_{oc}, and then to show a more precise way of checking the result.

Our cells can produce 0.6 VDC, maximum. So we must string some cells in series to get 1.5 VDC. The number in series will be greater than 1.5/0.6, or 2.5. Round this up to 3, because only whole cells are possible.

This string of three cells in series can produce 0.018A, maximum, under the gym's lighting conditions. It will be necessary to connect some three-cell strings as parallel branches to get the current we need. The number of branches will be greater than 0.05/0.018 = 2.77. Round this up to 3. There are three branches with three cells per branch, so nine cells are required.

The drawing below shows how the cells are connected; the arrangement is called an "array."

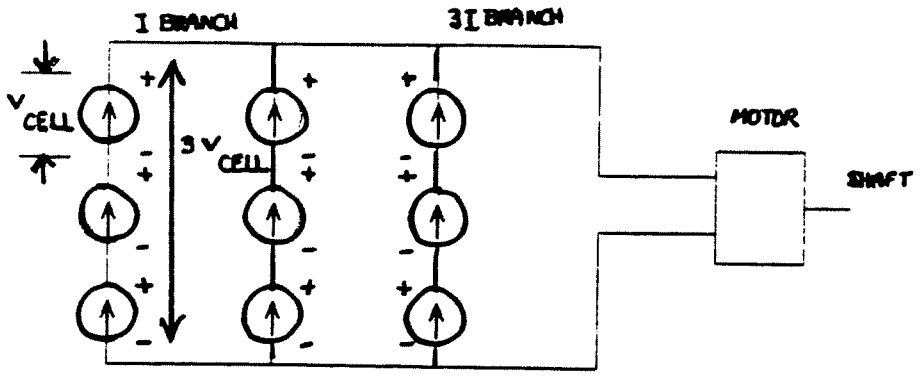

The array may be regarded as one big cell with I_{sc} = 0.054 A and V_{oc} = 1.8 VDC. As we did earlier for the single cell, we can measure and plot the I-V characteristic of the array, but in the gym lighting.

Ohm's Law for a DC circuit states that the voltage is directly proportional to the current; the constant of proportionality is called the "resistance." The equivalent resistance of the motor (R_{motor}) at the design point is (1.5 VDC/(0.05 A) = 30 Ohms. We can represent the motor by its "load line," a straight line drawn on the I-V plot. For more detail, see Instruction Sheet 9.

The intersection of the load line and the I-V characteristic establishes the operating point (voltage and current) of the solar cells and the motor.

The I-V characteristic, the load line, and the operating point are illustrated in Figure 2 below. If the actual curves are similar to those illustrated, then the operating point will be close to 1.5 VDC and 0.05 A, and near the maximum power point--a bonus.

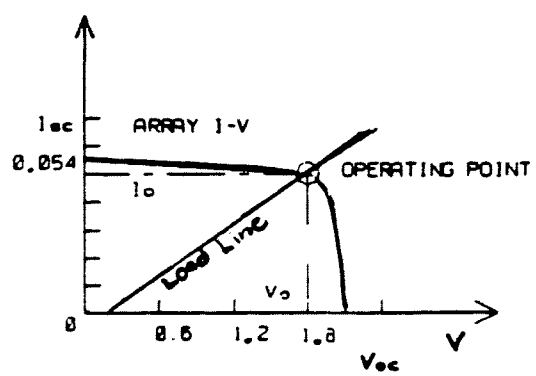

Figure 2

Instruction Sheet 7

Speed Sensing

SPEED SENSING CIRCUIT

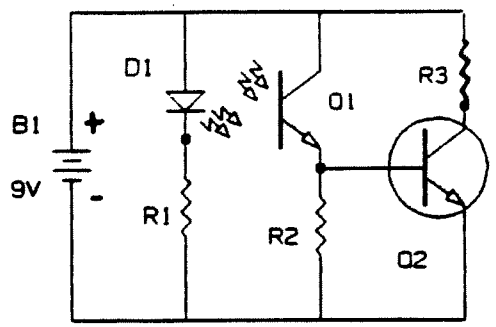

The parts below are available from Radio Shack - R.S. # given.

D1, Q1	-	(R.S.# 276-142 $ 1.99) IR (InfraRed) set
Q2	-	(R.S.# 276-2009 $ 0.59) 2N-2222 or equivalent NPN
R1	-	(R.S.# 271-1317 $ 0.39/5 pack) 470 Ohm, 1/4 Watt
R2	-	(R.S.# 271-1335 $ 0.39/5 pack) 10 k-Ohm 1/4 Watt
R3	-	(R.S.# 271-1321 $ 0.39/5 pack) 1 k-Ohm 1/4 Watt
B1	-	9 V transistor radio battery (with connector)

(Suggestion: Mount all pieces on a small solderless breadboard such as Radio Shack #276-175 ($ 7.49) or equivalent)

NOTES:

1. Solder two extra lengths (about 2") of #22 solid copper wire to the leads of D1 and Q1. Be careful not to overheat these parts.

2. Mount D1 and Q1 inside a small, blackened tube such as a drinking straw. Epoxy them inset from the edge of the tube so that the IR light beam from D1 will focus on the base of Q1 more readily. Separate the tubes about three to four times the propeller thickness that will pass between them.

3. Test the circuit by connecting an oscilloscope to the circuit as follows: (+) probe between R3 and collector of Q2, (-) or ground lead to (-) terminal of battery B1. Set the oscilloscope vertical input to 5 volts/cm and the sweep to 2 mS/cm. Pass a pencil between the tube openings so that the IR light beam is broken. This will cause the transistor Q1 to turn off and, in turn, Q2 to turn off and on again. The result will be evident on the oscilloscope display as a rapid rise and decay.

4. With the motor running (and propeller spinning, cutting the light beam) the oscilloscope should display a square wave pulse. You may have to adjust the oscilloscope's vertical and horizontal controls to get the best display.

5. A full revolution is counted on every other rise or decay of the waveform. Count the number of divisions (cm) horizontally from the first rise to the third rise. Multiply this distance by the sweep time (in mS/cm). This gives the time it takes to complete a full circle or revolution. Inverting this value gives the speed of the motor in revolutions per second (NO LOAD SPEED).

<u>Example</u>

Distance between Rise 1 and Rise 3 is 6.2 cm. The time base (sweep) is set on 2 mS/cm.

The time is: (6.2 cm) (2 mS/cm) = 12.4 mS per revolution

The speed is: 1/(0.0124 seconds per revolution) = 80.65

revolutions per second (RPS) or (80.65 RPS) (60 seconds per minute)

= 4,839 RPM

Instruction Sheet 8

Batteries

Electric batteries are devices that store electric energy for later use. All gasoline-powered cars employ batteries to provide power for starting the engine, and for running auxiliary systems, such as the radio, when the engine is turned off.

Only in solar-electric and electric vehicles is the battery used for propulsion. If the power the motor needs to move the solar-electric car is less than the power available to the motor from the solar array, then the excess power is stored in the battery. If the power available from the solar array is less than that required by the motor, then the battery discharges to make up the difference.

A battery is made of a positive electrode, a negative electrode, and an electrolyte. External connections are made to the electrodes. The electrodes are immerse in the electrolyte, which may be liquid or solid. If solid, the battery in Figure 1 is called a "dry cell;" if liquid it is called a "wet cell." The sketch in Figure 1 shows how a battery would be connected to a DC motor.

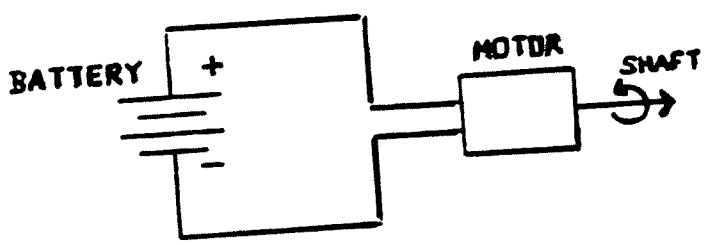

Figure 1

A battery stores electric energy by storing charge chemically at a certain electric potential, or voltage, between the electrodes. The voltage is characteristic of the electrodes and the electrolyte, or "couple." When charging, the chemical reactions between each electrode and the electrolyte proceed in a direction that requires electrons from an external source. When discharging, the reactions release electrons to the external load.

The calculations that follow can be resolved using the Battery Calculator.

<u>Example 1</u>

Suppose a battery is charged at an average current of 5 A for 10 hours at average cell voltage of 2 V. How much energy has been stored?

Rate of storage (from Watt's Law) = (5 A)(2 V) = 10 W.
Amount stored = (10 W)(10 h) = 100 W-h.
Or because 1 W = 1 J/s,
Amount stored = (10 J/s)(10 h)(3600 s/h)(1 kJ/1000 J)
= 360 kJ.

The W-h ("Watt-hour"), or kW-h ("kilowatt-hour"), is a commonly used unit of energy. Your home's electric bill is calculated according to how many kW-h you use.

When a battery is discharged only a portion of the stored energy can be recovered because of internal losses. These are manifest as a lower cell voltage when discharging. The ratio of the rate of energy discharge to the rate of energy charge at the same current and over the same interval is the battery's average efficiency.

Example 2

The battery of Example 1 is discharged for 10 h at an average rate of 5 A and an average cell voltage of 1.6 V. What is the battery's average efficiency and how much energy was recovered?

Efficiency = [(1.6 V)(5 A)]/[(2 V)(5 A)] = 0.8 or 80%.

Energy recovered = (1.6 V)(5 A)(10 h) = 80 W-h.

The depth of discharge (DOD) of some types of cells is limited to prevent damage to the cell when it is near total discharge. A typical limit for common lead-acid batteries is DOD = 0.8, or 80 %. So if this limit were to apply to the cell of Example 2, the net result would be that only about (0.8)(0.8) = 0.64 or 64% of the originally charged energy could be recovered.

A characteristic of batteries that is very important in solar car design is the energy stored per unit battery mass (e_B, W-h/kg). A battery type that has a high e_B can store more energy for a given mass, or weight. Thus the solar-electric vehicle using this battery will have a longer range. The table below gives the energy densities of some battery couples and also of gasoline, for comparison.

Storage	e_B (W-h/Kg)
gasoline	400
zinc-air	160
sodium-sulfur	100
nickel-hydrogen	50
lead-acid	25

These figures show the large gap remaining to be closed between batteries and gasoline.

Because of the energy efficiency problem, battery capacity is often given on an electric charge basis, rather than on an energy basis. This measure of capacity is the same for charge and discharge. For example, fully charging some battery at an average rate of 5 A for 10 h will store 50 A-h of electric charge (180,000 Coulomb) in the battery.

A battery's capacity decreases with the number of charge-discharge cycles it has experienced, referred to as the battery's "age." The capacity is also lower at high discharge rates than at low discharge rates. So capacities are usually quoted at some standard rate of discharge. Rather than mentioning the actual rate, the time required to completely discharge the battery will be given instead, for example "the capacity is 25 A-h at the 10 h rate." This rate would be 2.5 A.

Like solar cells, storage batteries can be connected in series to get more voltage and in parallel to get more current. The method of connection is the same as that described in Instruction Sheet 7.

Example 3

Small, AA-size rechargeable nickel-cadmium cells may be purchased locally. The cells are rated at 1.25 VDC and 0.045 A. At this rate the cell can discharge for 14 h, and no DOD limit applies. What is the capacity in A-h?

The capacity would be (0.045 A)(14 h) = 0.63 A-h ("0.63 A-h at the 14 h rate").

How many of these would be necessary to power the motor of Instruction Sheet 6, Example 2, if the 14 h rate is to be used? (This implies that we want the car to run for 14 h without recharging.)

The number in parallel would be 0.05/0.045 = 1.11. This would mean two branches. But if we are willing to discharge at 0.05 A, the battery would last for 12.5 h and one branch could be used. This would save weight, a very important thing to do when designing solar-electric cars.

The series "string" would consist of one battery, and so the total number is one. Otherwise, with two in series and the array in parallel with the battery (see Instruction Sheet 6, Figure 10)), the array would be held at open circuit. In this case, the batteries are not a good match to the motor, because it will have to work at a lower voltage.

Instruction Sheet 9

Solar-Electric Power System

The electric system of the car is composed of the solar array, the battery, and the motor. The purpose of this instruction sheet is to explain how these devices operate together to propel the car.

Figure 1 shows the electric circuit that interconnects the power system. (The solar cell array is represented by one cell for simplicity.) The battery and the array are wired in parallel with the motor so that either one can serve as a source of motor current, and so that the battery can be charged by the array.

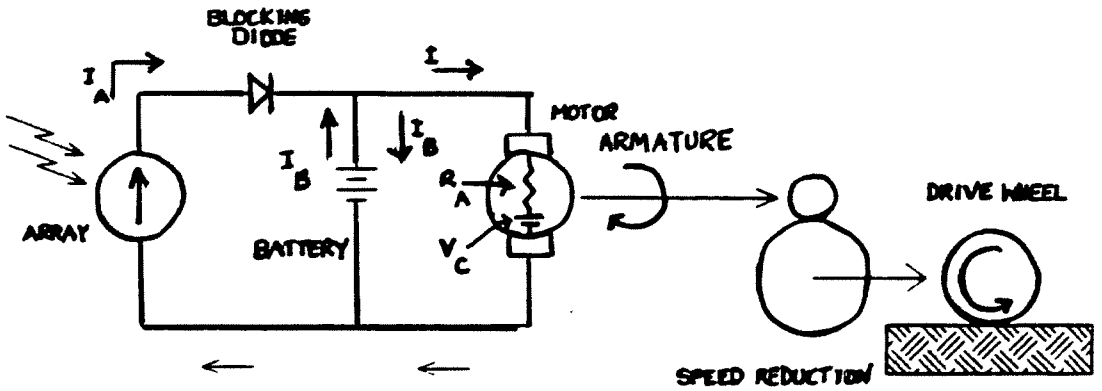

Figure 1

Two unfamiliar components have been drawn: a blocking diode and a speed reduction mechanism.

The blocking diode is a small electric device that allows current to flow only in the direction shown on its symbol by an arrow. Placed as shown, the diode prevents current from flowing backwards through the array (instead of to the motor) when the battery discharges.

The two gears between the motor armature and the wheel reduce the rotational speed of the drive shaft from that of the motor to that required by the wheel. The speed of the car is directly proportional to the rotational speed of the drive wheel. If the motor's rotational speed is 4000 rpm and the diameter of the larger gear is four times that of the smaller one, the rotational speed of the wheel will be 1000 rpm. The speed reduction also increases the torque delivered to the driving wheel by the same ratio (assuming no frictional losses in the reduction).

<u>Example 1</u>

A model solar-electric car is to be designed to travel 1.0 m/s and 1.0 W must be delivered to the drive wheel to do this. The car will use 5-cm diameter wheels (D_W). A small motor from Radio

Shack delivers 1.1 W at its maximum rotational speed of 4000 rpm (a torque of 2.63 (10^{-3}) N-m). This is also the motor's most efficient rotational speed; at lower speeds the torque is higher, but the efficiency is lower. Should this motor be used? And if it is used, what should the speed reduction be?

The motor should be used at its most efficient speed; this will keep the power it requires from the array or the batteries at a minimum. The motor power is 10% greater at 4000 rpm than that required by the car, so if the losses in the speed reduction are no greater than 0.1 W, this motor will serve. That is, the efficiency (output over input) of the reduction must be at least (100 x 1)/1.1 or 90.9%. Suppose that this is possible. The rotational speed of the wheel at 1.0 m/s is

$$N_W = v/(2\pi D_W) = 1.0 \text{ m/s} \quad /(2 \times 3.1416 \times 0.05 \text{ m})$$
$$= 3.18 \text{ rps}$$

The total reduction ratio must be

$$\text{reduction} = (4000 \text{ rpm})/(3.18 \text{ rps} \times 60 \text{ sec/min}) = 20.96$$

The torque delivered to the wheel will be

$$\tau = (20.96)(2.39 \times 10^{-3}) = 0.05 \text{ N-m}$$

at least, if the efficiency of the reduction is at least 90.9%. At a wheel diameter of 0.05 m and a speed of 1.0 m/s, this is the torque required to deliver 1.0 W to the driven wheel.

The current, I, required to produce a certain torque at a particular rotational speed, N, may be found from equation (2-5) of the Instruction Sheet 2 as follows:

$$I = (V - V_C)/R_A. \qquad (9\text{-}1)$$

V_C is fixed at a particular N for a given permanent-magnet motor, and R_A is also fixed for a particular motor. For this case equation (9-1) describes a straight line -- the I-V characteristic or "load line" of the motor at N rpm, with a slope of $1/R_A$. This load line has been drawn on the I-V characteristic of the solar cell array shown on Figure 2 below for three different rotational speeds, N_1, N_2, and N_3.

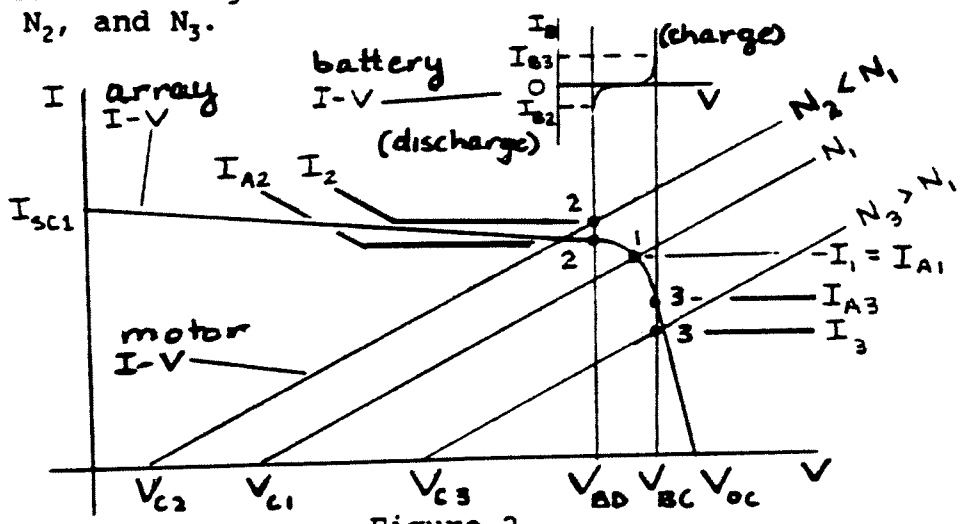

Figure 2

Also drawn is the battery's terminal voltage when it is discharging, V_{BD}, and when it is charging, V_{BC}. A small battery I-V curve appears above these limiting battery voltages. Recall that the same voltage is impressed on the array, the battery, and the motor, because they are connected in parallel and recall that torque is proportional to armature current.

The wires interconnecting the three components are usually called the "bus." Suppose that the intersection of load line 1 with the array's I-V curve represents the operating point for a steady speed V_1 on a horizontal surface under constant lighting conditions. The power demanded is I_1V_1. The battery is "floating on the bus," neither charging nor discharging.

Now suppose the car begins to climb a hill; more power is required to maintain v_1. But the speed drops because the solar power input is constant. If more torque (current) is required than can be supplied by the array, the bus voltage will drop until it reaches V_{BD} and the battery begins to dischrge. The motor current is now supplied by both the array and the battery, each operating at its respective point 2. The power delivered to the motor equals the demand, I_2V_{BD}.

$$I_2 = I_{A2} + I_{B2}. \qquad (9\text{-}2)$$

Now suppose the car passes the top of the hill and starts down the other side. Initially, less power and torque are required than is available from the sun. So the car speeds up, gradually increasing the power demand, the bus voltage rises and may reach V_{BC}, then the battery is charged by the array at operating point 3 and the extra solar energy is stored for later use. The motor current now is

$$I_3 = I_{A3} - I_{B3}, \qquad (9\text{-}3)$$

and the power is I_3V_{BC}.

Figure 3 illustrates what happens when the solar input is increased. The car is presumed to be operating on a horizontal surface at steady speed, originally. The original radiation level gives a short circuit current I_{SC1}, as shown. The increased sunlight produces a situation similar to going down a hill: the power available initially exceeds the power required. The speed increases, shifting the load line to the right until the increasing power demand balances the available power. As shown, this new operating point may allow battery charging.

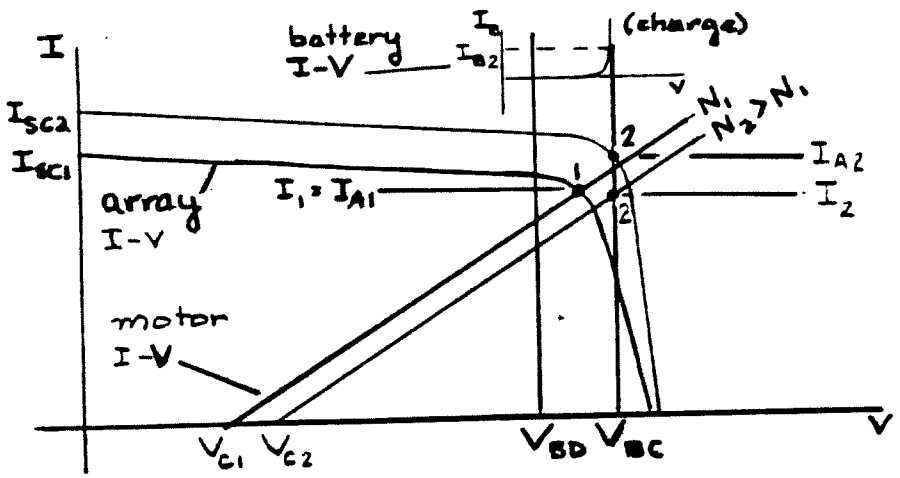

Figure 3

A reduction in the sunlight has an effect similar to going up a hill. Students can work this out for themselves using the forgoing explanation as a guide.

B. Books

1. Jr. Solar Sprint, A National Solar-Powered Model Car Competition for Science Students Grades 7 and 8.
Contact:

Marti Hahn
Argonne National Laboratory
Building 362-2B
9700 South Cass Avenue
Argonne, IL 60439
(708) 972-6489

The free information from this source will be helpful in planning competitions.

2. Celebrating the Sun! Building and Racing Solar Model Boats and Cars, by William S. Glazier, Ph.D ($2.00)
Contact:

William S. Grazier
Green Pastures Power Company
MANNA Corporation
1728 Rt. 198
Woodstock, CT 06281
(203) 974-3910

Dr. Glazier also stages solar-powered model boat, car, and airplane races.

3. Photovoltaics: A Manual for Design and Installation of Stand-Alone Photovoltaic Systems, by Steve McCarney, Ken Olson, and Jonny Weiss ($35.00)

Contact the authors at:

Colorado Mountain College
3000 County Road 114
Glenwood Springs, CO 81601

Also for sale at:
Sunnyside Solar
RD4 Box 808
Green River Road
Brattleboro, VT 05301
(800) 346-3240

A sensible, hands-on manual which gives the basics of solar cells with a minimum of solid-state physics.

4. Stand-Alone Photovoltaic Systems, A Handbook of Recommended Design Practices, SAND87-7023, Photovoltaic Design Assistance Center, Sandia National Laboratories, Albuquerque, NM.

Contact:

National Technical Information Service
U.S. Department of Commerce
5285 Port Royal Road
Springfield, VA 22161

Similar to 3., but contains short case studies.

5. Solar Energy Experiments, by Prof. Willis H. Thompson
Contact:

American Solar Energy Society
2400 Central Avenue, Suite B-1
Boulder, CO 80301
(303) 443-3130

Contains experiments on solar collector optics and solar cells.

6. Solar Hydrogen, Moving Beyond Fossil Fuels, by Joan M. Ogden and Robert H. Williams ($10.00)
Contact:

World Resources Institute
1709 New York Avenue, NW
Washington, DC 20006

A comprehensive summary of the case for converting the energy base to solar-generated hydrogen, including transportation.

7. Insolation Data Manual, by Connie L. Knapp, Thomas L. Stoffel, and Stephen D. Whitaker, SERI/SP-755-789, October 1980.
Contact:

Superintendent of Documents
U.S. Government Printing Service
Washington, DC 20402

Gives long-term, monthly averages of solar radiation (and other information) for 248 National Weather Service stations.

8. Solar Energy Classroom Materials (lesson plans, handouts, experiments, etc.) ($8)

Contact: SoftSwap (see C.1., below for address and telephone number)